Original user manual

Revision C

USER MANUAL

AKVA OCEANOGRAPHIC ENVIRONMENTAL BUOY

Technology for sustainable biology

AKVA GROUP™

Thank you for choosing AKVA group

AKVA group develops, manufactures and supplies technology and services aimed at solving biological and technical challenges in the global aquaculture industry. All our products, from single components to service assignments and complete farms, are designed to achieve the best possible fish welfare, operational performance and profitability for our customers.

We aim to write easy to understand user manuals, while providing as accurate and updated information as possible. In order to do this, we rely on input, feedback and collaboration with people who use our products. We appreciate all the input we have received, as this helps us provide better and safer equipment and solutions. Please contact us through our websites with questions or suggestions for improvements.

This manual is written with the purpose of complying with the standard NEK EN 82079-1 and NS-9415.

For a thorough introduction to your AKVA group product, carefully read through this user manual before assembling, installing or using the product. Our user manuals are available from our website: www.akvagroup.com/user-manuals.

Together we can contribute to making sure that fish farming is an environmentally friendly, sustainable and growing industry that produces safe and healthy seafood for a global market.

Best regards,
AKVA group

TABLE OF CONTENTS

ABBREVIATIONS AND GLOSSARY

A	Ampere - unit for electric current
Ah	Ampere hour - unit of electric charge
User	Person that is going to be using the equipment
Inclement weather	Weather conditions complicating standing upright in a service boat, and which can cause sea spray on electrical components while working on the equipment
EE waste	Discarded electrical and electronic products
H_S	Significant wave height
Hz	Hertz - unit for frequency (MHz = megahertz, million hertz)
kgf	Kilogram force - unit for buoyancy
O_2	Oxygen
Qualified personnel	Person who is trained in performing basic operations and maintenance tasks on the equipment
LAN	Local data net (local area network)
PE	Polythene - thermoplastic material
V	Volt - unit for electric force

1 SAFETY

Safety for the users of our equipment is main focus when AKVA group ASA develop new products and product manuals.

We strongly recommend that everyone who are going to be using the AKVA product, all who perform any type of repairs, service, maintenance or other work on AKVA products, and all who work in areas where such products are installed, are aware of the contents of this manual.

This recommendation is based on both personnel safety as well as a desire to keep AKVA products in order, and to avoid risk for damages as a result of not following safety instructions.

1.1 SAFETY SYMBOLS

WARNING!
Serious health risk or other incidents - implies a danger that may cause death and/or serious (irreversible) personnel injuries or damages to the equipment.

REQUIREMENT
Warning symbol indicating requirement.

NOTE!
Symbol that implies useful hints and recommendations for efficient use of the product.

RECYCLING
Warning symbol indicating information regarding recycling, waste management and disposal.

GO TO
Symbol that indicates a link to a page or section with further information. Click on underlined words to go to the reference or open the link.

1.2 ABOUT THE USER MANUAL

The purpose of this user manual is to enable qualified personnel to install, use and maintain the AKVA Oceanographic Environmental Buoy (hereafter also referred to as the Environmental Buoy) in a safe, secure and financially sustainable manner. The user manual provides answers to the most common questions regarding installation, operation and maintenance, and shall be considered as part of the Environmental Buoy equipment. The user manual shall be read before use and used as aid when working on or with the equipment.

Note that illustrations in this manual may differ from the actual products. However, the principles are the same.

1.3 TECHNICAL CONDITION

AKVA Oceanographic Environmental Buoy shall never be operated if any component is not properly installed. Equipment shall never be used if it is not in perfect technical condition. To avoid using defective equipment, follow the procedures in this user manual. If any of the equipment is used in a defective condition, the safety functions will be impaired.

Use only original spare parts supplied by AKVA group. Unauthorized rebuilding and modifications of the equipment is not recommended.

1.4 RECEIVING EQUIPMENT

Equipment must be handled very carefully during transport, when equipment is unpacked, when moving to and from the sea and during storage. Make sure that all parts specified in the delivery note have been received. If the order is not complete, or in case of damage during transport, contact AKVA group immediately. Check that plug caps are attached to contact points where sensors are not connected. Control that sensor cables are not be bent too much and not twisted, as this can affect the cable's functions and service life.

1.5 EQUIPMENT SAFETY

The Environmental buoy is not a mooring buoy. Work boats and other vessels should never be moored to the Environmental buoy. Make sure that plug caps and their fasteners are kept in order, in place and intact to avoid damage, and to ensure a long-lasting product. If a plug cap is damaged, or not used as instructed in this user manual, the warranty may be void or reduced. We recommend having extra plug caps available, so that there is no risk of connectors being left open if a plug cap is damaged or disappears. New plug caps can be ordered from AKVA group.

Cables shall be handled with great care to avoid reduction in product life. Camera and sensor cables shall not be bent too much and never be twisted, as this may affect the cable's functions and service life.

When controlling or maintaining the Environmental buoy, such as for battery replacement, cleaning or service tasks, the buoy must be taken up from the sea before the work is started.

All equipment must be handled in accordance with the instructions in this user manual. Poor handling of the equipment, neglect of preventive recommendations or use of incorrect power sources may be reasons for why the warranty on the equipment becomes void.

Always check all mooring after inclement weather, and regularly based on recommendations in this user manual.

1.6 USER SAFETY

Work on or with Environmental Buoy shall never be carried out in inclement weather.

2 ABOUT THE ENVIRONMENTAL BUOY

AKVA group has developed the oceanographic environmental buoy for registration of environmental factors affecting fish farm sites, in collaboration with PartnerPlast and several large fish farming companies.

The Environmental Buoy consists of a buoy body, mast, navigation lights, battery and environmental sensors, and it has a steel luminaire for mounting the mast and mooring. Environmental sensors (oxygen, temperature and salinity) are connected to the Environmental buoy via a junction box located under a cover on the top of the buoy. Doppler current profile sensor is installed in the bottom of the buoy body. Wave sensor is integrated in the mast.

Knowing the exact temperature provides important knowledge for optimal feeding. Oxygen data helps the user to choose the right time for feeding. AKVA Oceanographic Environmental Buoy also helps the user to make informed decisions based on real-time data and analysis of data logged through monitoring.

Illustration 1: AKVA Oceanographic Environmental Buoy

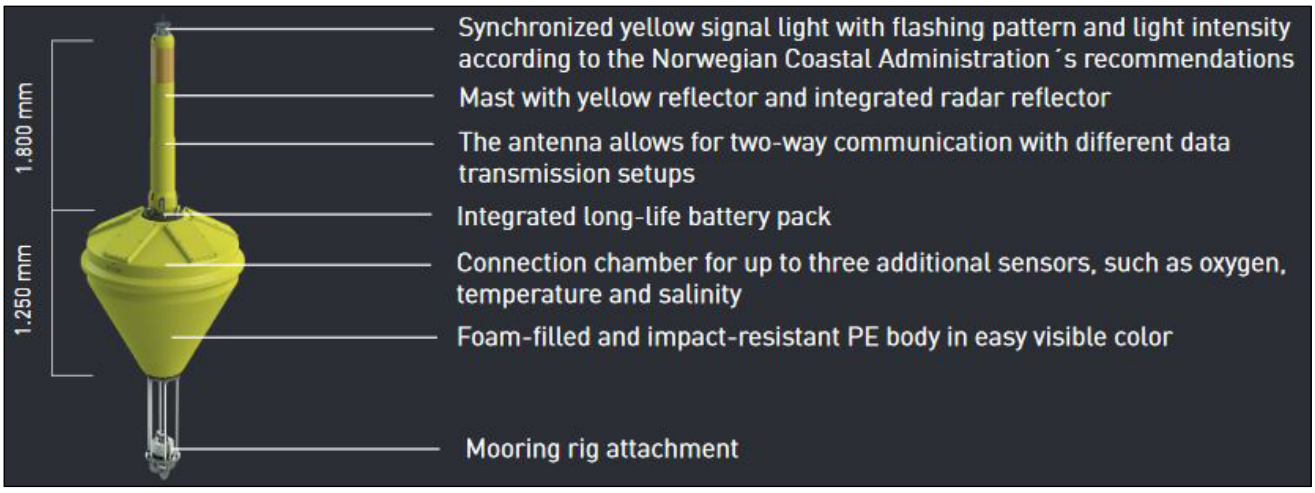

AKVA Oceanographic Environmental Buoy monitors parameters that make it possible to detect early changes in conditions for fish and site, and is delivered in four different configurations with 0-3 oxygen/temperature sensors. The data is transferred wirelessly to the fleet by means of radio communication, and is presented in a user-friendly web solution that provides a full overview of both the current picture and long-term trends. Parameters are measured in real-time and at different depths:

- **Direction and speed of ocean currents -** By knowing when the current is getting too strong, you can stop feeding to prevent feed loss.
- **Temperature** - Knowing the exact temperature is essential to feed properly.
- **Oxygen** - Oxygen data helps you choose the correct time for feeding, and the right time for commencing delousing operations.
- **Salinity** - Monitor the salinity levels in the water for better understanding of the fish conditions.
- **Waves** - Measures significant wave height (H_s), maximal wave height (H_{MAX}) and wave direction from north. Wave periods are logged and may be read in report.

The buoy's smart energy solution ensures minimal maintenance, and the buoy enters sleep mode between each measurement to ensure long battery life.

2.1 TECHNICAL SPECIFICATIONS

AKVA Oceanographic Environmental Buoy can be delivered with up to three connected sensors. It is possible to choose various combinations of environmental sensors.

Table 1: Technical specification for Buoy body

Height	1250 mm
Diameter	1190 mm
Weight	87 kg
Buoyancy	500 kgf
Material	Polythene (PE)
Color	Yellow (RAL 1023 oht IALA approved)

Table 2: Technical specification for Mast

Height	Approx. 1800 mm
Radar reflector	Integrated in the mast
Radio communication	UHF/870 MHz
Communication range	1,5 km
Reflex	Yellow
Weight, including battery	32 kg

Table 3: Technical specification for Warning light

Operating voltage	10-32 V
Average power consumption	160 mW
Visibility	3 nautical mile
Light source	Yellow/Ragngul LED (Light Emitting Diode)
Blinking pattern	Oc Y 2s
GPS data	Position and time RS232

Table 4: Technical specification for Battery

Operating voltage	18 V
Battery capacity	200 Ah
Weight	19,5 kg
Cell data	D-Cell Alkaline
Cable	1500 m
Expected operating time, standard setup	Approximately 1 year *(expected operating time is shortened by changes in log setup and temperature)*
Plug	Binder RG24 Pin 1 = +1,8 V, Pin 2 = 0 V

Illustration 2: Battery

2.2 SENSORS IN THE ENVIRONMENTAL BUOY

GO TO
User manual for environmental sensors (oxygen, temperature and current) is found in www.akvagroup.com/usermanuals.

External sensors for oxygen, salinity and temperature are supplied by appointment.
Oxygen sensors and salinity sensors used with the Environmental Buoy are supplied in three cable lengths (6, 16 and 26 meters), and they are supplied with a junction box which is mounted on the buoy body in the connection chamber. Both of these sensors have a built-in temperature sensor. A total of 3 sensors can be connected to the junction box.

Illustration 3: Sensor junction box and O_2-sensors with various cable lengths

2.3 SYSTEM DESIGN

Illustration 4: System design

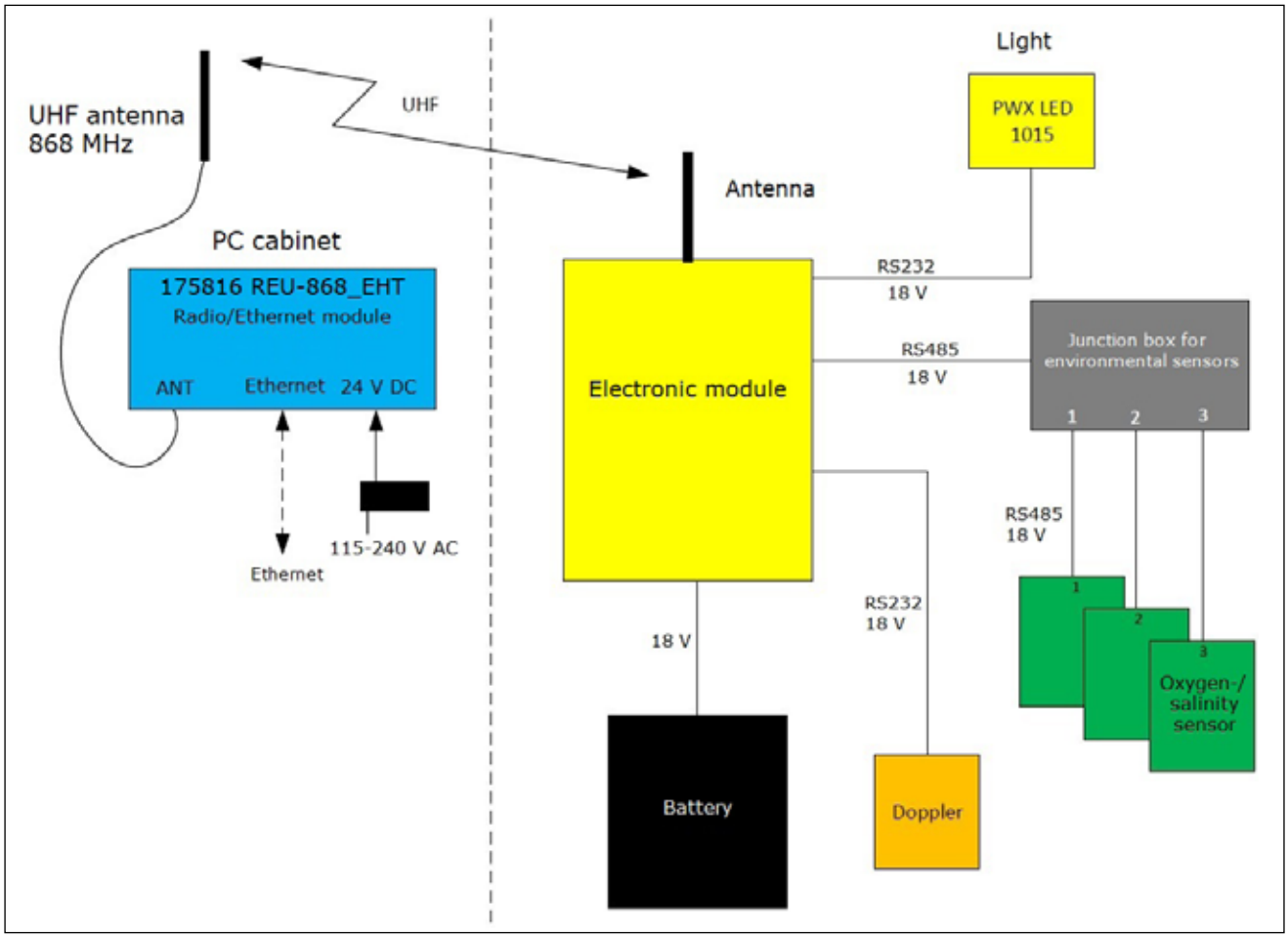

3 MOORING

REQUIREMENT
Mooring has to be calculated before the Environmental Buoy is launched in the sea. Contact AKVA service personnel for assistance with calculating the mooring.

Place the Environmental Buoy at a suitable distance from the site pens for unaffected measurements of the surrounding current conditions. We recommend placing the buoy approximately a pens diameter times 2 away from the nearest pen.

Local conditions may be of great importance for location, and we recommend that experienced oceanographers are involved in the process of considering where the buoy should be placed for best possible measurements.

Illustration 5: Suggestion for how to moor the Environmental Buoy

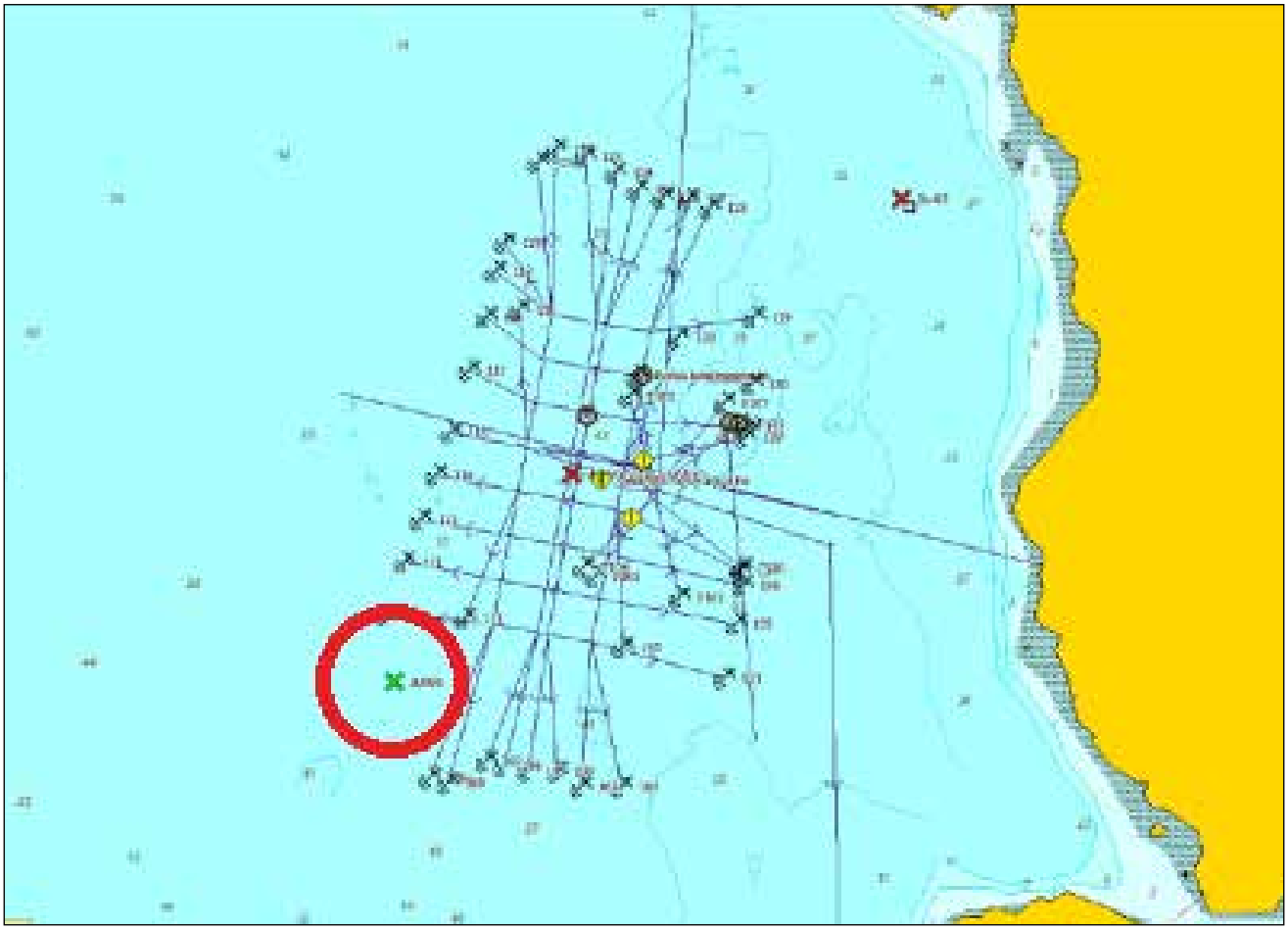

The weight of the buoy in the surface and requirements for submerged buoyancy are calculated on the basis of local environmental parameters, such as depth and speed of ocean current. If the buoy is left with a steep slope in the water, it will not work optimally - this is especially important for current measurements. For best possible stability, we recommend that a stabiliser weight is fitted under the buoy, normally a 100 kg chain 10 meters below the Environmental Buoy is used.

The buoy's steel luminaire is made of acid-resistant stainless steel, not to disturb magnetic compasses in measuring instruments.

The 10 meter long rope between the Environmental Bouy and the chain weight is attached to the bouy mooring rig with a stainless steel shaft and shackle. If galvanized steel is used, these parts will corrode.

Between the 10-meter rope and the chain, the shackle and grommet must be of the same steel quality as the chain, normally galvanized steel sufficiently.

Illustration 6: Mooring example sketch

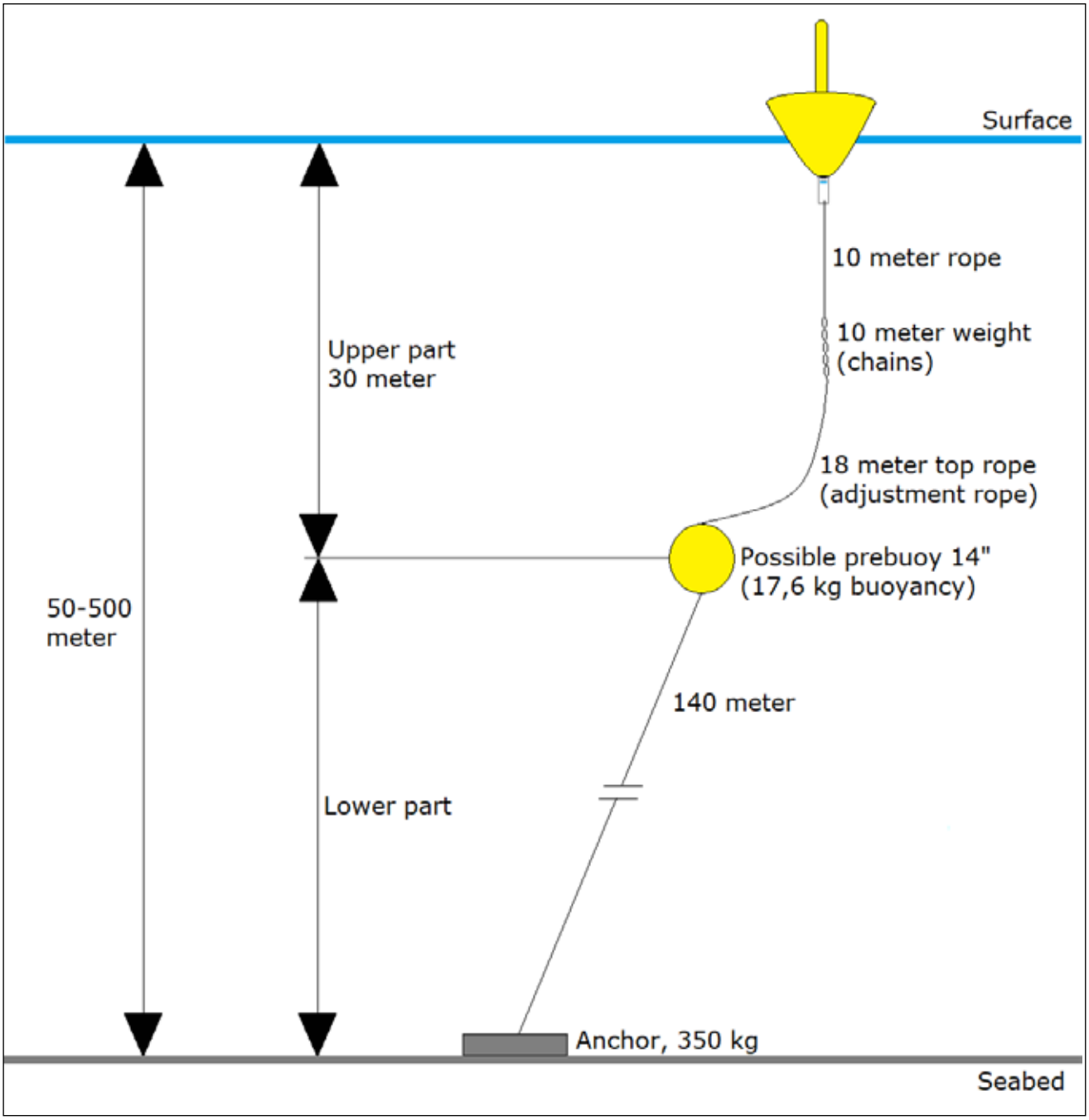

4 ASSEMBLING

4.1 ASSEMBLING RECEIVER

The buoy communicates wirelessly with a base unit that is placed on the barge or a nearby land installation. The base unit must be installed indoors and have access to power and an Internet access point. The antenna is placed outside, with cable to the base unit. There must be a clear line of sight between the Environmental buoy and the antenna, and the distance between them can not exceed 2 kilometres. We recommend mounting the antenna as high as possible, for example on the roof of the barge. Avoid mounting the antenna close to other antennas or transmitters, as this may disturb the signal.

Parts of the delivery:

1. Antenna box
2. Antenna
3. Antenna cable
4. PC cabinet

Illustration 7: Antenna box, antenna, antenna cable and PC cabinet

Procedure:

1. Connect the antenna to the cable.
2. Connect cable to antenna box.
3. Open the PC cabinet and connect the top network port (LAN 1) to Internet. The lower network port (LAN 2) is connected with a network cable to the antenna box.
4. Connect PC cabinet to power.

Illustration 8: PC cabinet open

4.2 ASSEMBLING BUOY

WARNING!
AKVA Oceanographic Environmental Buoy weighs approximately 120 kg and is a long and irregular construction, which requires sufficient lifting equipment for assembly. At least two people shall participate in all handling, lifting and installation work.

Necessary equipment:
- 13 mm wrench
- 3 mm hex key
- Loctite 243 thread protection
- Plastic strips

Procedure:
1. Prepare oxygen sensors, as described in the sensor user manual.
2. Place the buoy body on a stable surface so that the pipe aperture for sensor cables is easily accessible.

Illustration 9: Pipe aperture for sensor cables

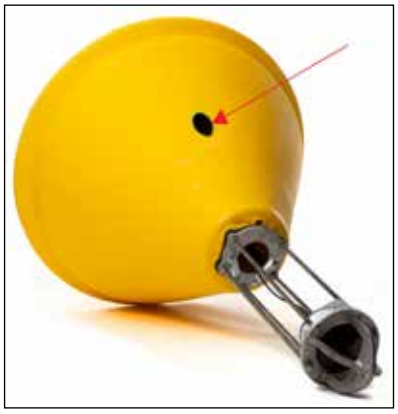

3. Control that the Doppler current sensor cable is thread through the pipe aperture in the buoy body, and that the cable lies towards the junction box in the chamber in the opposite side of the opening in the bend from the lifting eye.

Illustration 10: Doppler cable shall point towards the junction box chamber

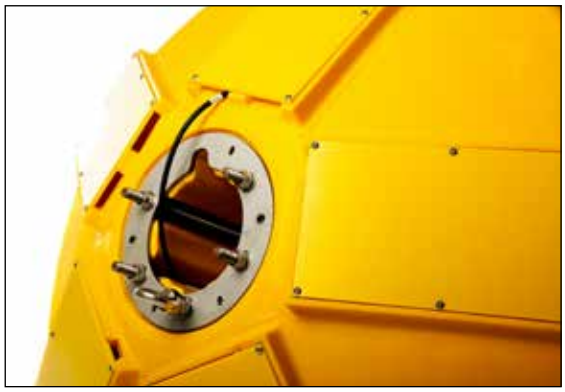

4. Two people lift the mast and carefully slide the mast bottom first through the buoy top opening. Make sure that the opening in the connection flange and the two connectors point towards the chamber where the sensor junction box is placed (away from the lifting eye).

Illustration 11: Mast connection flange

5. Stop sliding the mast with 10-15 cm between the mast and bouy body flanges.
6. The M10 nut used as a spacer between the flanges (mounted just above one of the four eccentric locks used to attach the mast to the bend body) is also used for earthing. Thread the earthing cable onto the M10 bolt, and attach with a nut.

Illustration 12: Attaching the earthing cable

7. Loosen the 4 M8 bolts in the connection flange.
8. Attach the other end of the earthing cable to the M8 bolt closest to the M10 bolt.
9. Apply silicone oil spray as lubrication between the mast and the buoy.
10. Slide the mast completely against the buoy. Attach the 4 M8 bolts in the connection flange, and use Loctite 243 on the bolts.
11. Open the lid over the chamber where the junction box is placed by loosening the 6 corresponding screws.
12. Attach the Doppler cable to the mast power connector (illustration 13: Mast power connectors).
13. Attach the sensor junction box to the other mast power connector.
14. Thread cables from up to 3 selected sensors through the pipe aperture in the buoy body, see illustration 8: Pipe aperture for sensor cables.
15. Connect sensors to the sensor junction box. Put plug caps on any unused connectors.

Illustration 13: Mast power connectors

NOTE!
The sensors may be delivered with various cable lengths, and it is therefore possible to order sensor length for desired measuring depth. In case of excess cable, coil it together and store in the chamber next to the sensor junction box.

16. The upper opening of the pipe aperture for sensors is located inside the chamber where the sensor junction box is installed. Here is a safety hook (illustration 14: Attach cable strain relief to the safety hook). Open the safety hook and attach the strain relief loops to the safety hook.

Illustration 14: Attach cable strain relief to the safety hook

17. To activate the buoy, remove the magnetic switch. When removed, the light should flash once to indicate that the battery is connected. This may take up to 10 seconds after activation.

Illustration 15: Magnetic ON-OFF-switch

NOTE!
Always test the buoys functions before transporting it to sea.
Keep the magnetic switch in a safe and suitable place when the Environmental Buoy is in use.

18. When all the instructions have been completed, check that the data transfer is working properly.
19. Before taking the buoy out for installation in the sea, attach plastic strips through the eccentric locks hooks as shown in illustration 16: Place plastic strips around the eccentric locks.

Illustration 16: Place plastic strips around the eccentric locks

4.3 INSTALLING IN SEA

WARNING!
AKVA Oceanographic Environmental Buoy weighs approximately 120 kg and is a long and irregular construction, which requires sufficient lifting equipment for assembly. At least two people must participate in all handling, lifting and installation work.

PROTECTIVE EQUIPMENT REQUIREMENTS
Safety garments are mandatory to wear when working in, on or by water or sea.

Necessary equipment:

- Boat with crane that can lift 500 kg
- Lifting strap that can lift 500 kg
- Complete mooring:
  - Rope: 10 mm Dyneema
  - Chain: 11 kg per meter
  - Anchor: chain loops or similar
  - Buoy for buoyancy: 500 kgf
  - Map with exact location (OLEX), longitude and latitude

Procedure:

1. Review the buoy mooring calculation, and make sure that it is performed correctly.
2. Check that all mooring parts, such as chains, ropes, anchors and more, are measured correctly.
3. Attach the lifting strap to the lifting eye in the coupling flange in the Environmental Buoy body top, as shown in illustration 17: Lifting strap attached to the lifting eye.
4. Attach the intended anchorage to the anchorage attachment at the bottom of the buoy in a secure manner in accordance with local regulations.
5. If desired, use an underwater camera to control that everything is positioned correctly.

Illustration 17: Lifting strap attached to the lifting eye

5 USING THE CLOUD SOLUTION

GO TO
Measured data from sensors in AKVA Oceanographic Environmental Buoy is presented in a new and user friendly web solution: akvasensor.no.

The cloud solution runs on Microsoft Azure and will be available via akvasensor.no. Data from the Environmental Buoy in the cloud solution may be monitored via an application in a smart phone and in the website. Communication between the database and the user-role system ensures that only authorized users have access to the measurements.

Illustration 18: Example of a screen shot from the website

To retrieve a **Report**:

1. Click Reports (in the left column).
2. Select which buoy data to retrieve from, as well as start and end date and report format.
3. Select Bending Information or Measurement Report.
4. Select the program in which the report is to be opened.
5. The report opens.

Select **Settings** in the left column (under User) to change the oxygen unit, color theme, graph colours, user information, or change the password.

To change the **language**, click on the current language at the bottom of the left column and select the desired language.

6 MAINTENANCE

When the environmental buoy is to be checked or maintenance of the buoy is to be carried out, such as battery replacement, cleaning or other service tasks, the buoy must be taken up by the water and on board a service boat, feed raft or on land before the work is started.

GO TO
For maintenance of oxygen, temperature and current sensor, see User Manual for Environmental Sensors.

6.1 MAINTAINING DOPPLER SENSOR

For best possible measurement, clean the sensor surface once a month and more often during the growing season. Use a soft brush with a long shaft that reaches the sensor from the boat to avoid lifting the buoy out of the sea. Doppler transducer must be cleaned every time the Environmental Buoy is removed from the water.

If shells grow on the sensor head, remove gently with a cleaning brush.

Clean the Doppler transducer every time the AKVA Sensor Buoy is taken out from the water. Do not use any kind of wire brush or sharp objects on the Transducer head, as this will damage the acoustic elements. Doppler may be lubricated with a thin layer of anti-fouling agent after cleaning, but this can lead to reduced power of the sensor.

7 HANDLING, TRANSPORT AND STORAGE

7.1 HANDLING CONNECTORS

The connectors are lubricated with silicone grease at production site, and therefore it is not necessary to prepare these before installation. It is important to avoid exposing cable and mast connectors to seawater when they are unplugged. They shall always be protected with the plug cap provided or be connected. On the buoy, the plugs must always be placed in one of the chambers under lid on top of the buoy. The connectors shall never come in contact with seawater.

7.2 TRANSPORT

AKVA Oceanographic Environmental Buoy shall be transported in a closed vehicle with the magnetic switch installed (turned off state). See illustration 15: Magnetic ON-OFF-switch for how to turn on the magnetic switch.

7.3 STORAGE

AKVA Oceanographic Environmental Buoy shall be stored indoors in dry and stable conditions. Turn the mast OFF by replacing the magnetic switch before disconnecting sensors and removing the mast from the buoy body. See illustration 15 Magnetic ON-OFF-switch.

Disconnect all cables from the equipment and install plug caps that are complete and in order. Avoid exposing the connectors with sea water, rinse well with fresh water if exposed. We recommend disinfecting all equipment before storage.

7.4 DISINFECTING

In case the Environmental Buoy, belonging cables, ropes and other associated equipment are to be moved from one location to another, it is mandatory to disinfect the equipment to prevent possible infection. All equipment that is disinfected must be rinsed with fresh water, as disinfectants are corrosive chemicals that may damage the materials.

8 DECOMMISSIONING

8.1 DISASSEMBLING

When disassembling the equipment (for overhauling or disposal), follow the installation instructions, but in reverse order.

8.2 DISCARDED PARTS

RECYCLING
Deliver all discarded parts to recycling.

The Environmental Buoy is cast in polyethylene (PE) and must be handled and disposed of in accordance with current regulations for waste management. Dispose of all equipment in accordance with current regulations and regulations.

Recycle as much as possible:

- The battery is classified as EE waste, and must be returned for recycling at the nearest recycling facility (the battery does not contain mercury or cadmium).
- Sort and dispose of metal parts, return the various types of metal for recycling.
- Return electrical parts for recycling.
- Return PE plastic for recycling.

APPENDIX A - ILLUSTRATIONS AND TABLES

APPENDIX B - NOTES

DOCUMENT NO: DC10001804

DOCUMENT PART NO: 10007128

Rev	Date	Issued	Issued by	Reviewed by	Approved by
C	23.11.21	General: - Updated symbols used in the manual 2.2 Sensors in the environmental bouy: - Updated info. regarding built in temperature sensors. 3 Mooring: - Updated weight of chain to 100kg 5 Using the cloud solution: - Added procedures for retrieving a report, settings procedure and changing language.	EBL	RJ	RJ
B	25.11.20	Approved (ECO-0001945)	EBL	GL	GL
A	23.03.20	Approved (ECO-0001738)	LEK	GL	GL

About AKVA group

AKVA group is present in all markets with offices in Norway, Chile, Denmark, Scotland, Spain, Greece, Iceland, Canada, Australia and Turkey. AKVA group is a unique partner with the capability to offer both pen farming and land based aquaculture operations with complete technical solutions and service.

By developing technology focused on solving the biological challenges, we contribute to the continued development of a sustainable industry. Good operational performance and fish welfare are paramount in achieving good results, and investing in our technology will help deliver both.

AKVA group ASA | www.akvagroup.com

Plogfabrikkvegen 11, N-4353 KLEPP STASJON

NORWAY