Spare Parts
Catalogue
Net Cleaners & Lights

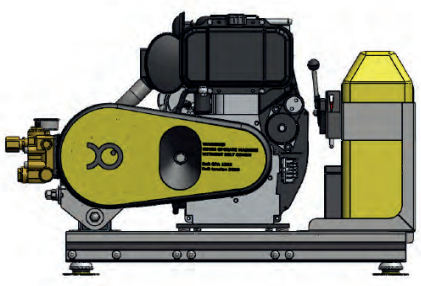

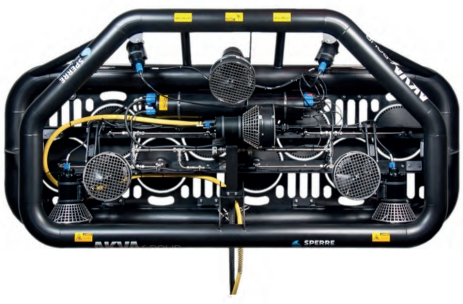

Your Aquaculture Technology and Service Partner

AKVA GROUP™

Spare Parts Catalogue - Sensor Systems

Thank you for choosing AKVA group as your supplier of aquaculture technology. AKVA group is a technology partner and supplier of advanced equipment and services to the aquaculture industry worldwide. We are a puplic company operating in one of the world's fastest growing industries and supply everything from single components to complete installations. AKVA group is recognized as a pioneer and technology leader through more than 30 years. Corporate Headquarters are in Norway.

This catalogue includes all spareparts used in net washers and lights for both cage and land based aquaculture. It contains a complete overview with
illustrations showing in detail each part used and where it is mounted.

For more information please visit our website
www.akvagroup.com

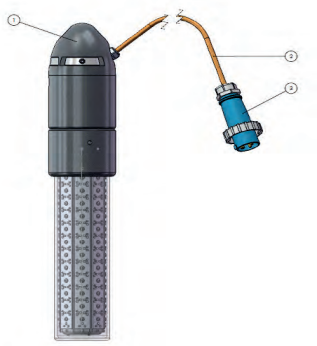

The spare part illustrations have position numbers showing where each part is mounted in each unit. This will help you to locate the correct parts for your equipment.

1 Net Cleaners

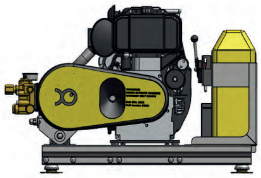

2 Lights

Note. *The information in this document is subject to change without notice and should not be construed as a commitment by AKVA group ASA. AKVA group ASA assumes no responsibility for any errors that may appear in this document. In no event shall AKVA group ASA be liable for incidental or consequential damages arising from use of this document or of the software and hardware described in this document.*

We reserve all rights in this document and in the information contained therein. Reproduction, use or disclosure to third parties without express authority is strictly forbidden. Additional copies of this document may be obtained from AKVA group ASA at its then current charge.

wavemaster™ polarcirkel™ fishtalk™ akvasmart™

Contents

1. Net Cleaners 4
- F-Drive K-28-280-SB-24-VA-22 4
- D-Drive K-28-280-S-D-HA-20 8
- Spare parts for #0104465 10
- Spare parts for #890805-372 10
- H-Drive K28/280SH 11
- Dual Head Washer Venturi 12
- SpareParts for Net Washers 16
- FNC 8 Net washer - spareparts 16

2. Lights 21
- AKVA Aurora SubLed 1350W combi. 35m 21
- AKVA Aurora SubLed 1350W combi. 55m 21
- AKVA Aurora Combi. Power Cab. 1x1200W 22
- AKVA Aurora Combi. Power Cab. 2x600W 22
- AKVA Aurora Combi. Power Cab. 3x400W 23
- BlueLED 100W 480nm 24
- BlueLED 400W 480nm 55 m 26
- IDEMA SubLite Integra 250W 30
- IDEMA SubLite Integra 400W 32
- IDEMA SubLite Integra 1000W 34
- Spare parts for Lights 36

Net Cleaner F-Drive K-28-280-SB-24-VA-22

#0104432

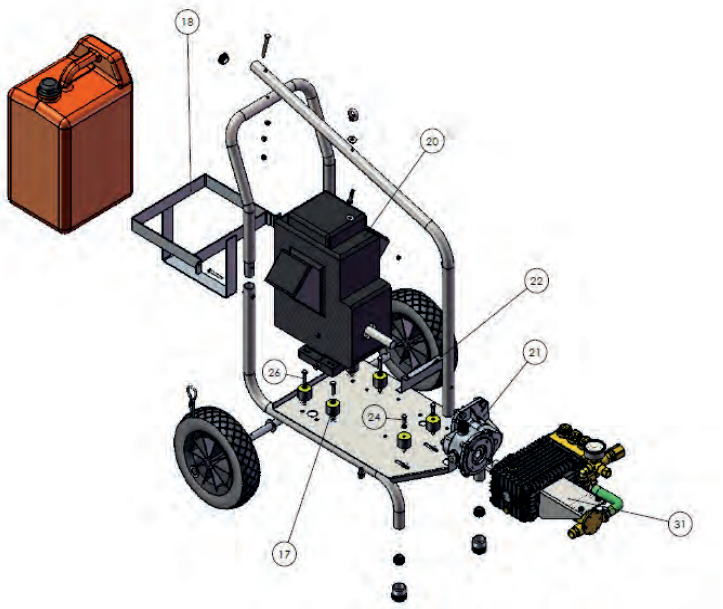

Position	Number	Item Name	Quantity	Unit	BOM/LRU
3	890805-91	Carriage Complete	1	pc	BOM page 5
17	308-001	Vibration dampner Ø40x30 M8 female/male	6	pc	LRU
19	111-005	Petrolcan 22l incl TankLock	1	pc	LRU
20	890803-386442	Motor Petrol Vanguard 16,4kW (22HK)	1	pc	LRU
21	890805-1324GIR	Gear PA 25,4mm axel 2,276:1 13-17kW	1	pc	LRU
22	0104436	Bracket between pump and main plate Vanguard	1	pc	LRU
26	308-035	Screw Hex Head M8x35	2	pc	LRU
31	0104465	Pump 2530PTO Dual Shaft	1	pc	BOM page 6
	0104648	Heat shield Vanguard Exhaust	1	pc	LRU
	111-006	Petrolhose w/ pump	1	pc	LRU
	0104634	Fuel supply kit, small washer - gasoline	1	pc	BOM page 7
	200-171	Axle-Key Crank 1/4” Vanguard	1	pc	LRU
	890803-808705	Exhaust box, Vanguard 22HK	1	pc	LRU
	890803-SL3/4	Vacumm hose 3/4” comp. w/ filter	1	pc	LRU
	890804-RD12A	Filter suction Ø55x436mm 3/4” 90my	1	pc	LRU
	890803-98079	Spark plug, RC-12YC, Champion		pc	LRU
	890803-841729	Starter Vanguard, new	1	pc	LRU
	980803-390621	Startrope 178cm Vanguard	1	pc	LRU
	0105419	Oilfilter long, Vanguard	1	pc	LRU
	890803-692519	Air filter 16,4kW (22HK) Vanguard	1	pc	LRU
	890803-692520	Feedfilter, air 16,4kW (22HK) Vanguard	1	pc	LRU
	890803-691035	Gasoline filter, 16,4kW (22HK) Vanguard	1	pc	LRU

Carriage Complete
#890805-91

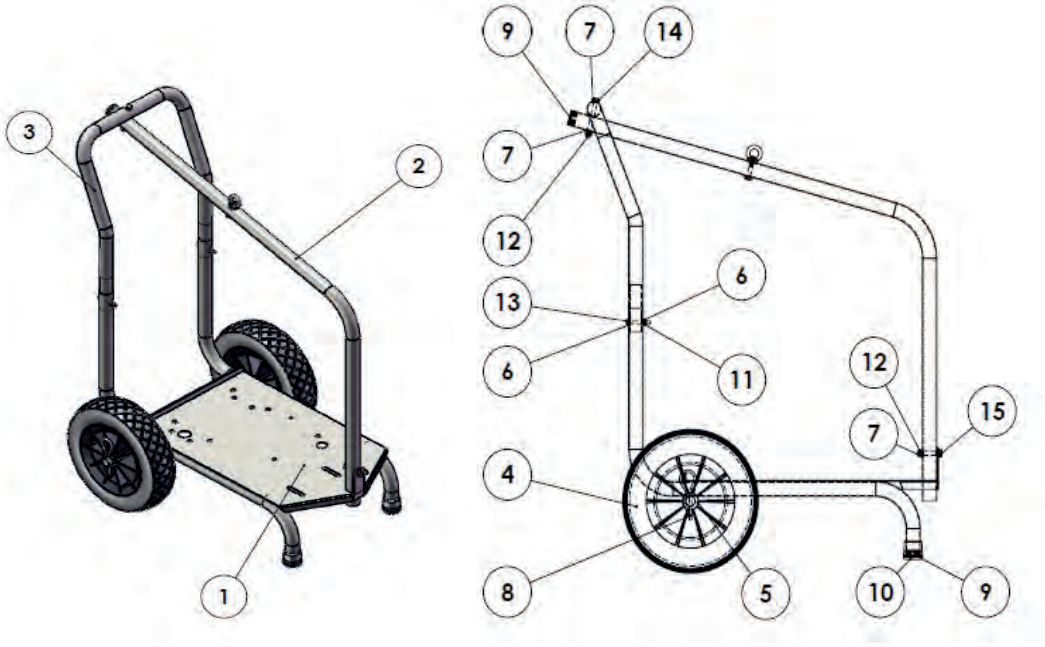

Position	Number	Item Name	Quantity	Unit	BOM/LRU
1	890805-92	Carriage	1	pc	LRU
2	0104459	Lifting Bow for Wagon Basic	1	pc	LRU
	890805-98	Carriage Bow w/ Splicing plate	1	pc	LRU
4	111-039	Wheel QO 305 Black (20x75)	2	pc	LRU
5	308-034	Screw Hex Head M8x20	2	pc	LRU
5	104805	Washer Ø30-Ø8,4 T1,5mm	2	pc	LRU
6	90210804	Washer M8 Large	2	pc	LRU
7	111-040	GL 32 Rubber liner	3	pc	LRU
8	111-041	AG 32 Rubber holk Grey	2	pc	LRU
9	312-023	Washer M6	4	pc	LRU
10	313-003	Nut M6	2	pc	LRU
11	308-244	Screw Hex Head M6x50	2	pc	LRU
12	308-296	Screw Hex Head M8x80	1	pc	LRU
13	312-014	Washer M8	5	pc	LRU
14	308-023	Nut Nylock M8	2	pc	LRU
15	308-037	Screw Hex Head M8x45	1	pc	LRU
	111-009	Tank holder AISI 316 Type 2	1	pc	LRU

Pump 2530PTO Dual Shaft
#0104465

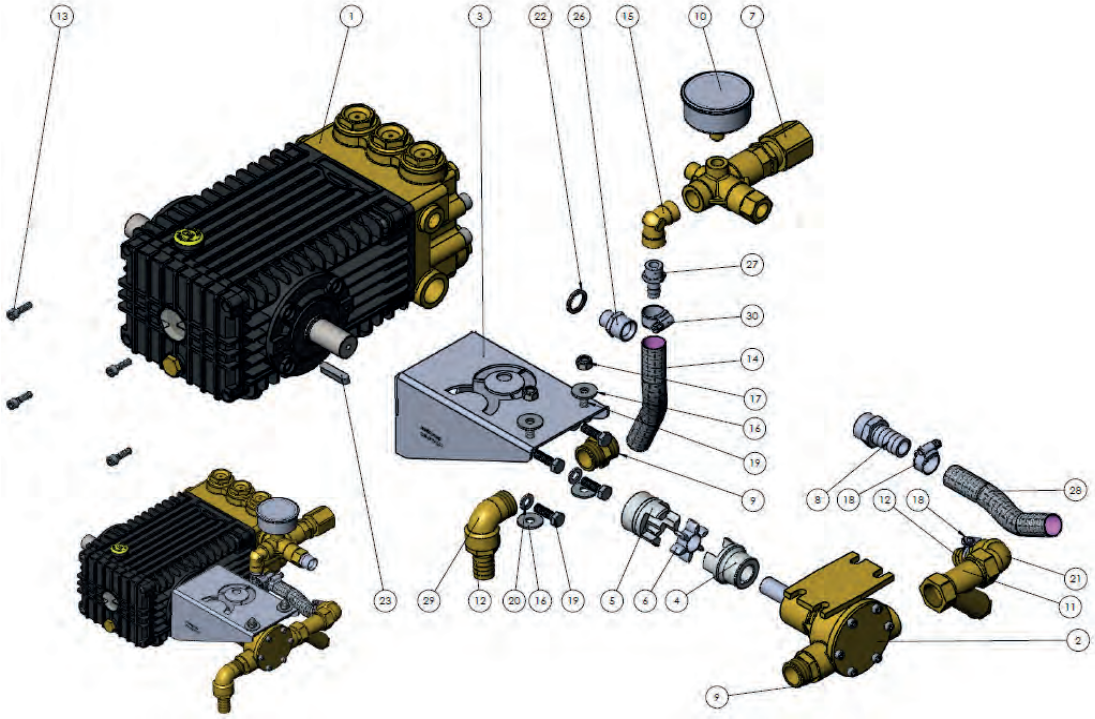

Position	Number	Item Name	Quantity	Unit	BOM/LRU
1	0104463	Pump T2530PTO	1	pc	LRU
2	111-013	Pump Jabsco PED 040BSP Bronze 40l 1450rpm	1	pc	LRU
3	890805-383	Bracket for feed pump K28-280	1	pc	LRU
4	111-012	Rotex Alu NAV Ø17H7 NnD	1	pc	LRU
5	890803-196102	Rotex 19/24 NAV Ø24H7 NnD	1	pc	LRU
6	111-011	Rotex 19 Gear rim 92 SH A	1	pc	LRU
7	111-015	Cirvulationsvalve VB350	1	pc	LRU
8	890803-382113	Hose socket 381, brass, 3/4” M, 3/4”	2	pc	LRU
9	111-024	Adapter reducing 367, 3/4”M-3/4”M Brass	3	pc	LRU
12	111-034	Hose HYDRO’K 13mm Circulation	0,3	m	LRU
15	312-014	Washer, M8	4	pc	LRU
17	308-023	Nut, nylock M8	2	pc	LRU
18	111-017	Manometer 0-600 bar 63mm 1/4”	1	pc	LRU
19	890803-300-16	HoseClamp SMS R19-28mm Acid proof	1	pc	LRU
20	890803-500-28	HoseClamp SMS R19-28mm Acid proof	2	pc	LRU
	890803-SLA3/4	Vaccum hose OSL, 20 x 3mm, PVC	0,13	m	LRU
	890803-000242	Y-strainer Ø1mm n16 3/4”	1	pc	LRU
	10059	Parallell key A8 7 x 30	1	pc	LRU
	890803-000017	Hose socket 3821 Brass 1/2” M 1/2”	1	pc	LRU
	111-267	Adapter reducing 367 1/2” M - 1/2” M, brass	1	pc	LRU
	111-274	Elbow 392 Brass 1/2” F - 1/2” F	1	pc	LRU
	111-275	Elbow 392 Brass 3/4” F - 3/4” F	1	pc	LRU
	350-094	Adapter reducing RA 1/2” M - 3/8” M	1	pc	LRU
	890803-382113	Hose socket 3821 Brass, 3/4” M, 3/4”	1	pc	LRU
	111-281	Elbow 394 Brass 3/4” F - 3/4” M	1	pc	LRU

Fuel Supply Kit, small washer - gasoline
#0104634

Position	Number	Item Name	Quantity	Unit	BOM/LRU
	0104619	Fuel tank coupling plate	1	pc	LRU
	111-163	HoseClamp Ø8-14 (width - 9mm)	3	pc	LRU
	0104625	Coupling 5/16” hose - 1/4” BSP female	1	pc	LRU
	0103023	Seal O-Ring Ø52,07x2,62mm	1	pc	LRU
	0104635	Blind plug 1/8” NPT A4	1	pc	LRU
	0104457	Elbow 6K A4 1/4” BSP F - 1/4” BSP M	1	pc	LRU
	0104743	Fuel hose 7,5 x 14mm	0,4	m	LRU
	111-008	OMC Male coupling chassis 1/4” BSP	1	pc	LRU
	111-007	OMC Female coupling Hose Socket	1	pc	LRU
	0104636	Screw wood M2,9 x19	5	pc	LRU
	111-005	Petrolcan 15-22l incl TankLock	1	pc	LRU

D-Drive K-28-280-S-D-HA-20

#890805-372

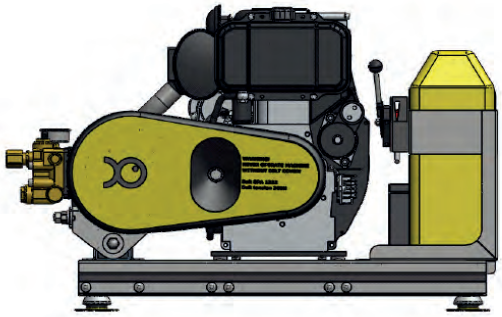

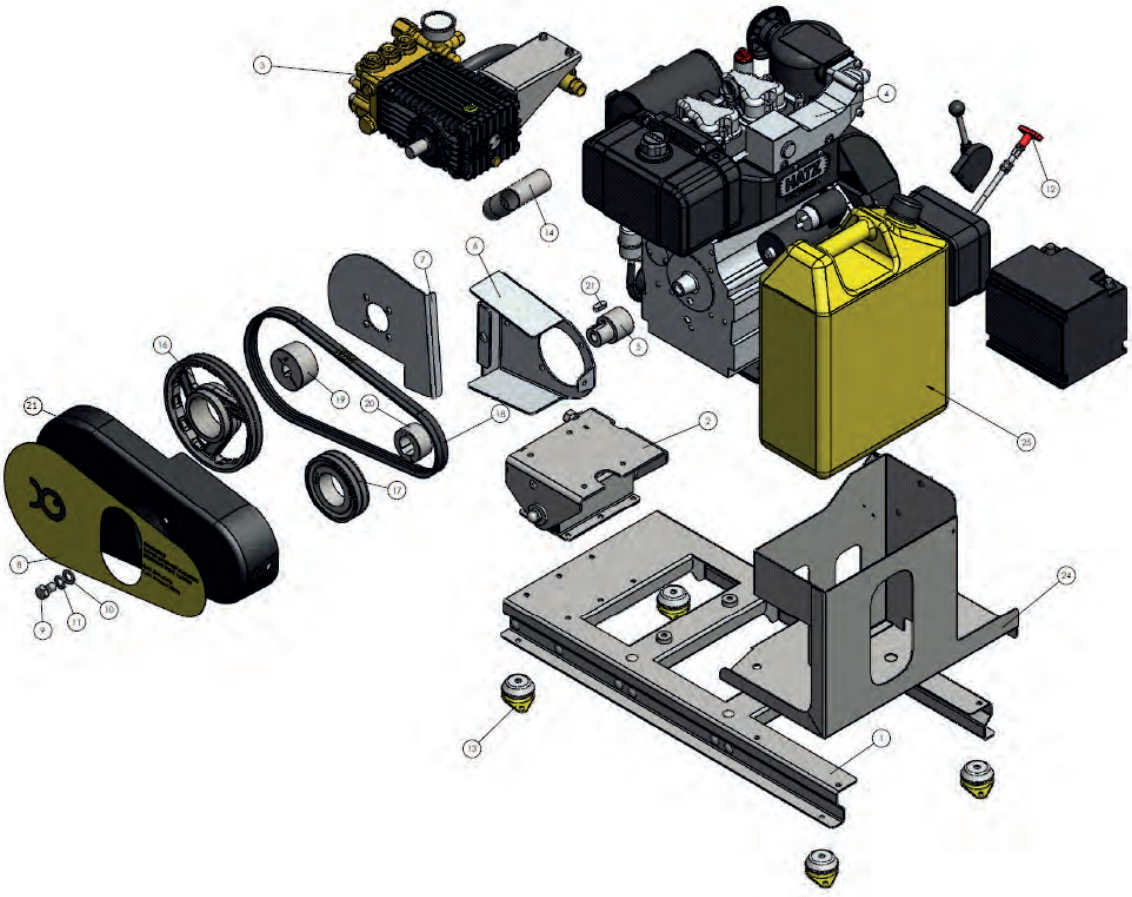

Position	Number	Item Name	Quantity	Unit	BOM/LRU
1	890805-424	Main Frame for K-28-280-SD-Hz-20-R	1	pc	LRU
2	890805-429	BASE 50 engine mount	1	pc	LRU
3	0104465	Pump 2350PTO dual shaft	1	pc	BOM page 6
4	200-300	Motor, Diesel, Hatz 2G 40, 14,9kW 120Hk	1	pc	LRU
5	890805-451	Hatz Axle 2G 40, machined	1	pc	LRU
6	890805-460	Belt cover support, complete	1	pc	LRU
7	890805-447	Pully cover	1	pc	LRU
10	312-037	Washer M16	1	pc	LRU
11	0104488	Washer spring M16	1	pc	LRU
12	0104511	Stop cable w/ handle for Hatz Engine	1	pc	LRU

Position	Number	Item Name	Quantity	Unit	BOM/LRU
14	0104510	Throttle cable w/ controller	1	pc	LRU
15	0104494	Belt pully SPA-224-2SG	1	pc	LRU
16	0104495	Belt pully SPA-132-2	1	pc	LRU
17	0104497	V-belt SPA 1232 (driving belt)	2	pc	LRU
18	0104498	2517-24 Boss	1	pc	LRU
19	0104499	2012-40 Boss	1	pc	LRU
20	0104500	Wedge 12x8x30	1	pc	LRU
22	0104398	Startbattery 12V Calsium	1	pc	LRU
23	890805-445	Belt cover	1	pc	LRU
24	890805-440	DPT tank holder	1	pc	LRU
25	308-204	Screw Hex Socket M10x16	1	pc	LRU
28	308-354	Screw Flat Socket Hex M8x20	6	pc	LRU
35	313-008	Nut, nylock M6	1	pc	LRU
	0105739	Oil for D-Drive/F-Drive	3	l	LRU
	0104620	Bracket for fixture stop wire	1	pc	LRU
	0104621	Dampening mat Diesel tank	1	pc	LRU
	0104622	Dampening mat Battery	1	pc	LRU
	0104420	Petrolcan 20l incl TankLock	1	pc	LRU
	0104629	Fuel kit for small washers Diesel edition	1	pc	LRU
	200-912	Vibration dampner RA40 EMA Novibra	4	pc	LRU
	890805-464	Battery Clamp	1	pc	LRU
	01014656	Wema Hour meter	1	pc	LRU
	0104703	Throttle plate kit Hatz	1	pc	BOM page 9
	0104699	Exhaust bend Hatz engine w/ clamp	1	pv	LRU
	0105003	Threaded axle M6x205mm	2	pc	LRU
	0104696	Wireholder for Hatz engine	1	pc	LRU
	0105036	Battery cables for Hatz washer, assy	1	pc	LRU
	0105061	Dekal Hatz belt cover	1	pc	LRU
	890803-SL3/4	Vacuum hose 3/4″ comp w/ filter	1	pc	BOM page 10

Throttle plate kit Hatz
#0104703

Position	Number	Item Name	Quantity	Unit	BOM/LRU
	0104683	Throttle bolt for Hatz engine	1	pc	LRU
	0104684	Throttle plate for Hatz engine	1	pc	LRU
	0104686	Seger ring 5mm shaft SGA	1	pc	LRU
	0104687	Washer M5	1	pc	LRU
	0104693	Screw Pan Head M4x6	1	pc	LRU

Vacuum hose 3/4” complete w/ filter #890803-SL3/4

Position	Number	Item Name	Quantity	Unit	BOM/LRU
	890803-SLA3/4	Vacuum hose OSL 20 x 3mm, PVC	3	m	LRU
	890803-500-28	HoseClamp SMS R 19-28mm , acid proof	2	pc	LRU
	890803-382113	Hose socket 3821, Brass, 3/4”M, 3/4”	1	pc	LRU
	890804-RD12A	Filter suction Ø55x436mm 3/4” 90 my	1	pc	LRU
	890803-16212	Coupling POM, 1 1/2”F, 3/4”F BSP	1	pc	LRU
	890803-162112	Hose socket 3416 Brass 3/4”M 3/4” loose Hex	1	pc	LRU
	111-031	Coupling 375 Brass 3/4” smooth	1	pc	LRU

Spare parts for #0104465

Position	Number	Item Name	Quantity	Unit	BOM/LRU
	111-024	Adapter Reducing 367 3/4”M-3/4”M Brass	1	pc	LRU
	350-006	Nipple 3/8”M22 M-M Brass	1	pc	LRU
	350-085	Dowty 3/8” AISI 316	1	pc	LRU
	350-094	Adapter Reducing RA 1/2”M - 3/8”M	1	pc	LRU
	890803-1210	Impeller 040 SP Neo SPL	1	pc	LRU
	800-144	Stamp bolt 66 serie	1	pc	LRU
	890803-660400	Stamp Ø20x54 W2525/T2530	1	pc	LRU
	890803-KIT2	KIT 2, Oil Sealing device, W928	1	pc	LRU
	890803-KIT16	KIT 169, Valve kit, W2525/T2530	1	pc	LRU
	890803-KIT170	KIT 170 Sleeve kit, W2525/T2530	1	pc	LRU
	0104510	Throttle cable w/ controller	1	pc	LRU

Spare parts for #890805-372

Position	Number	Item Name	Quantity	Unit	BOM/LRU
	890805-39	Suction filter, diesel pump	1	pc	LRU
	0105460	Oil filter 1505-SP4152	1	pc	LRU
	0105461	Diesel filter 1505-WF8127	1	pc	LRU

H-Drive K28/280SH

#890805-136

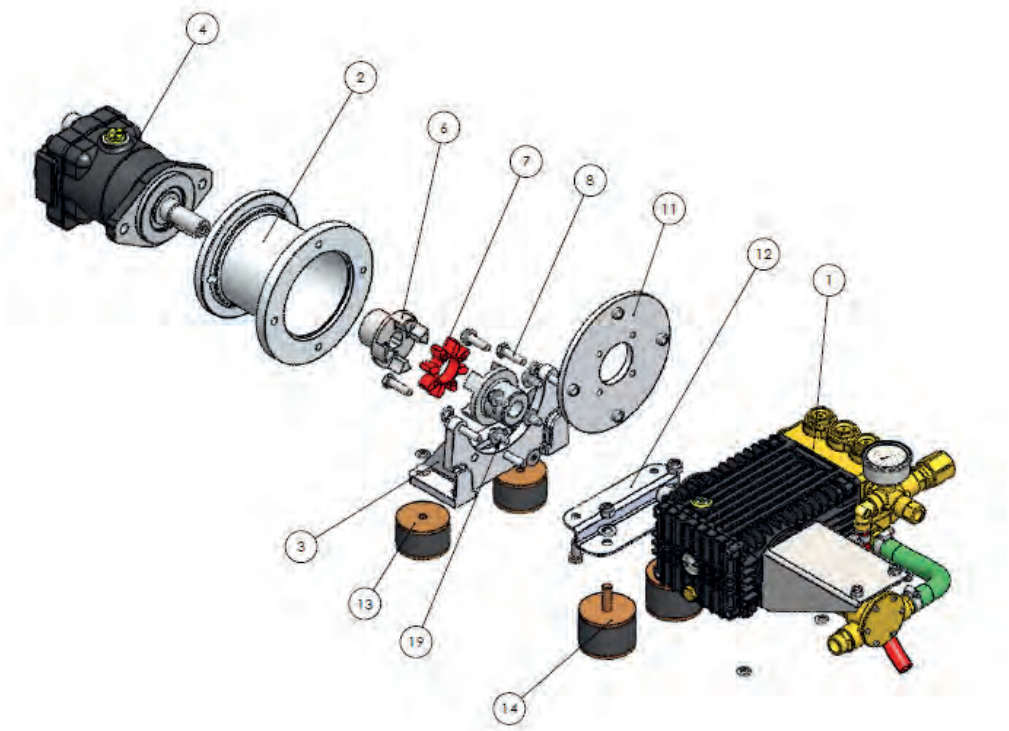

Position	Number	Item Name	Quantity	Unit	BOM/LRU
1	0104465	Pump 2530PTO dual shaft	1	pc	BOM page 6
2	200-273	PumpBracket/kLocke PFL200/6/3 Alu	1	pc	LRU
3	200-277	Flange, PTFL 200, Alu	1	pc	LRU
4	200-200	Motor Hydraulikk AksialStamp M2 25mm	1	pc	LRU
5	200-902	Rotex 38 GG Nav Ø24H7 NnD	1	pc	LRU
6	200-903	Rotex 38 GG Nav Ø25H7NnD	1	pc	LRU
7	200-901	Rotex 38, Gear rim, 98 Shore A	1	pc	LRU
8	308-257	Screw Hex Head M10x35 A4 DIN933	3	pc	LRU
9	890805-2008	Washer Spring M10	8	pc	LRU
11	890805-17	Flange between pump/coupling s66	1	pc	LRU
12	0104576	Bracket Z-shape 20mm distance	1	pc	LRU
15	308-255	Screw Hex Head M10x25	2	pc	LRU
16	90211204	Washer M12 A4 DIN9021	2	pc	LRU
17	308-259	Screw Hex Head M10x50	3	pc	LRU
18	9851204	Nut Nylock M12	2	pc	LRU
	0104617	Vibration damper M10 double female	2	pc	LRU
	0104618	Vibration damper M12 male/female	2	pc	LRU

Dual Head Washer Venturi

#PN10000037

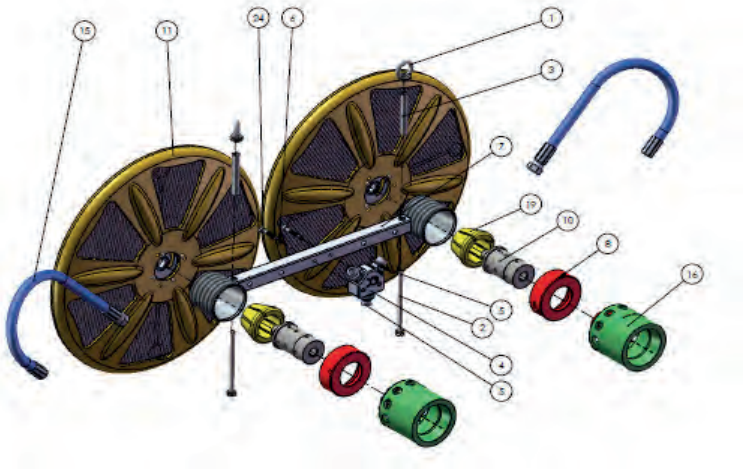

Position	Number	Item Name	Quantity	Unit	BOM/LRU
1	313-012	Nut Eye M8 A4 lift	2	pc	LRU
2	308-236	Screw Hex Head M8x120	2	pc	LRU
3	960101-141	Distance pipe DUAL400HD	2	pc	LRU
4	960101-131	Y-manifold 3/8" BSP	1	pc	LRU
5	360-009	Adapter 3/8" M/M AISI316	2	pc	LRU
6	312-027	Washer Spring Ø6	2	pc	LRU
7	PN10000036	Frame	1	pc	LRU
8	PN10000195	Tension nut Ø75 x 16 TPI stub acme	2	pc	LRU
9	PN10000027	Swivel Mosmatic M18x1,5 LH	1	pc	LRU
10	PN10000028	Swivel mosmatic 3/8" bsp	1	pc	LRU
11	10000243	Disk guard 400 2012	2	pc	LRU
14	960101-133	Nozzle Disk 400HD M18 counter clockwise	1	pc	BOM page 14
15	960101-334	Rig hose, 440mm, 3/8inch, 650 Bar, inv	2	pc	BOM page 15
16	PN10000092	Washer Head Retrofit Venturi	2	pc	BOM page 15
17	1250804	Washer M8	8	pc	LRU
18	0106021	Screw Button Hex Head M6x12	8	pc	LRU
19	PN10000196	Tension collet	2	pc	LRU
24	91206354	Screw Hex Socket M6x35	2	pc	LRU
	350-094	Adapter Reducing RA 1/2"M-3/8"M AiSi316	1	pc	LRU
	200-617	Nipple 3/8inch F /M22 x 1.5 M AISi303	1	pc	LRU
	350-083	Swivel 3/8" M/F AISI 316 350 bar	1	pc	LRU
	0105985	Disk guard fastener	2	pc	LRU
	960101-132	Nozzle Disk 400HD 3/8" clockwise	1	pc	BOM page 13
	350-085	Dowty 3/8 inch AISI 316	4	pc	LRU
	360-009	Adapter 3/8" M/M AISI31	1	pc	LRU

Nozzle Disc 400HD 3/8” Clockwise
#960101-132

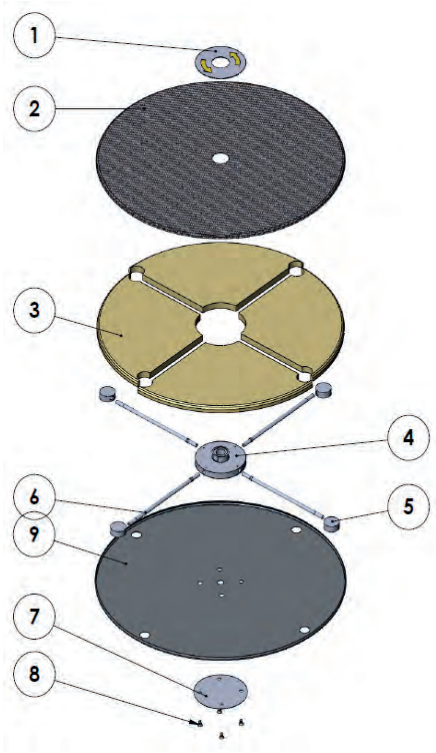

Position	Number	Item Name	Quantity	Unit	BOM/LRU
1	960101-344	Dreieindikator skive medurs	1	pc	LRU
2	960101-223	Karbonlokk/laminering	1	pc	LRU
3	960101-89	Kake 40, Divinycell	4	pc	LRU
4	960101-85	Senterflens R3/8″ medurs	1	pc	LRU
5	960101-1	Dyseholder medurs	4	pc	LRU
6	960101-13	Tube 40	4	pc	LRU
7	960101-87	Frontplate HD	1	pc	LRU
8	308-228	Screw Flat Socket Hex M4x8	4	pc	LRU
9	960101-125	Front 400mm Superkrum	1	pc	LRU

Nozzle Disc 400HD 3/8” Count. Clockwise
#960101-133

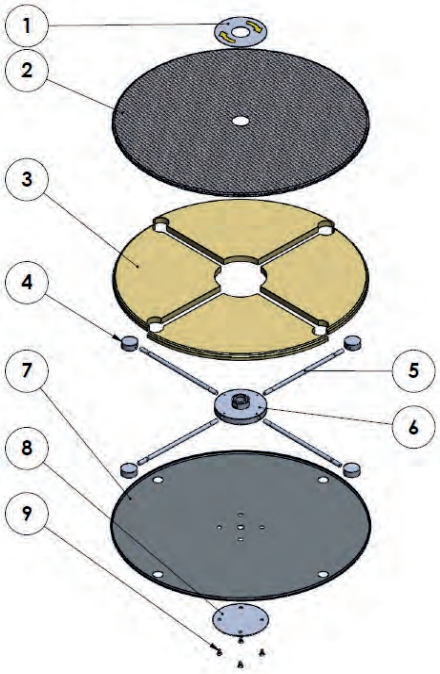

Position	Number	Item Name	Quantity	Unit	BOM/LRU
1	960101-343	Dreieindikator skive moturs	1	pc	LRU
2	960101-223	Karbonlokk/laminering	1	pc	LRU
3	960101-89	Kake 40, Divinycell	4	pc	LRU
4	960101-24	Nozzle holder count.clockwise AISI316	4	pc	LRU
5	960101-13	Tube 40	4	pc	LRU
6	960101-86	Centerflens, HD Count.Clocwise AISI316	1	pc	LRU
7	960101-125	Front 400mm Superkrum	1	pc	LRU
8	960101-87	Frontplate HD	1	pc	LRU
9	308-228	Screw Flat Socket Hex M4x8	4	pc	LRU

Rig hose 440mm 3/8” 650 bar
#960101- 334

Position	Number	Item Name	Quantity	Unit	BOM/LRU
1	960101-323	Hi Press Hose Treljet 3/8” 650 bar	0,44	m	LRU
2	960101-327	Pressure sleeve, HT hose 3/8” AISI316	2	pc	LRU
3	960101-325	Hose Coupling 3/8” HT hose, loose nut	1	pc	LRU
	960101-328	Banjo 3/8” AISI316	1	pc	LRU

Washer Head Retrofit Venturi
#PN10000092

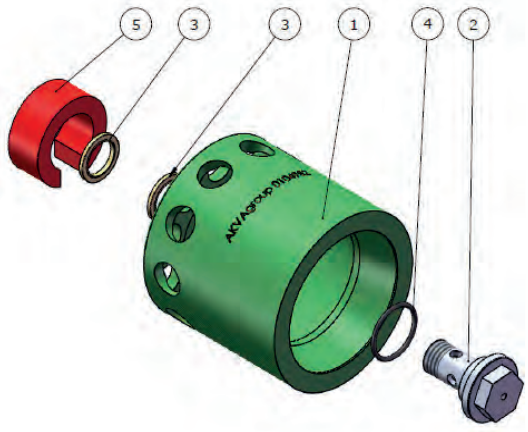

Position	Number	Item Name	Quantity	Unit	BOM/LRU
1	0104952	Retrofittable Venturi Nozzle	1	pc	LRU
2	0104682	Banjo bolt venturi edition	1	pc	LRU
3	350-085	Dowty 3/8 inch AISI 316	2	pc	LRU
4	10161	Seal O-Ring 25x2 mm	1	pc	LRU
5	0104863	Horseshoe for Venturi	1	pc	LRU

SpareParts for Net Washers

Position	Number	Item Name	Quantity	Unit	BOM/LRU
	890803-000113	TurboNozzle UR35 065 w/lanse Aisi316	optional	pc	LRU
	890803-000114	Hi Pressure Pistol VEGA2 w/ext. and Coupling	optional	pc	LRU
	890803-000115	Lance 400mm AiSi316 m/ Nozzle 065	optional	pc	LRU
	890803-251736	TurboNozzle UR 35 065 350 Ba r	optional	pc	LRU
	890803-303060	Hi Pressure Pistol VEGA2 m/svivel	optional	pc	LRU
	890803-251794	RepKit turbo Nozzle UR35 065	optional	pc	LRU
	890803-410976	RepKit turbo Nozzle 045	optional	pc	LRU
	0104607	LS3-1 Foamlance w/ tank	optional	pc	LRU

FNC 8 - Net Washer

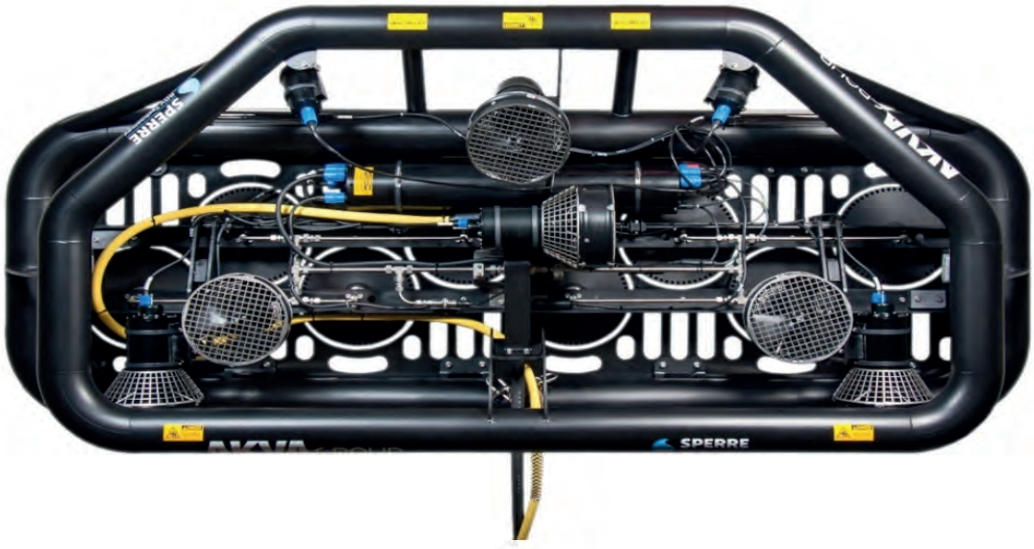

Spare Parts Net washer FNC 8

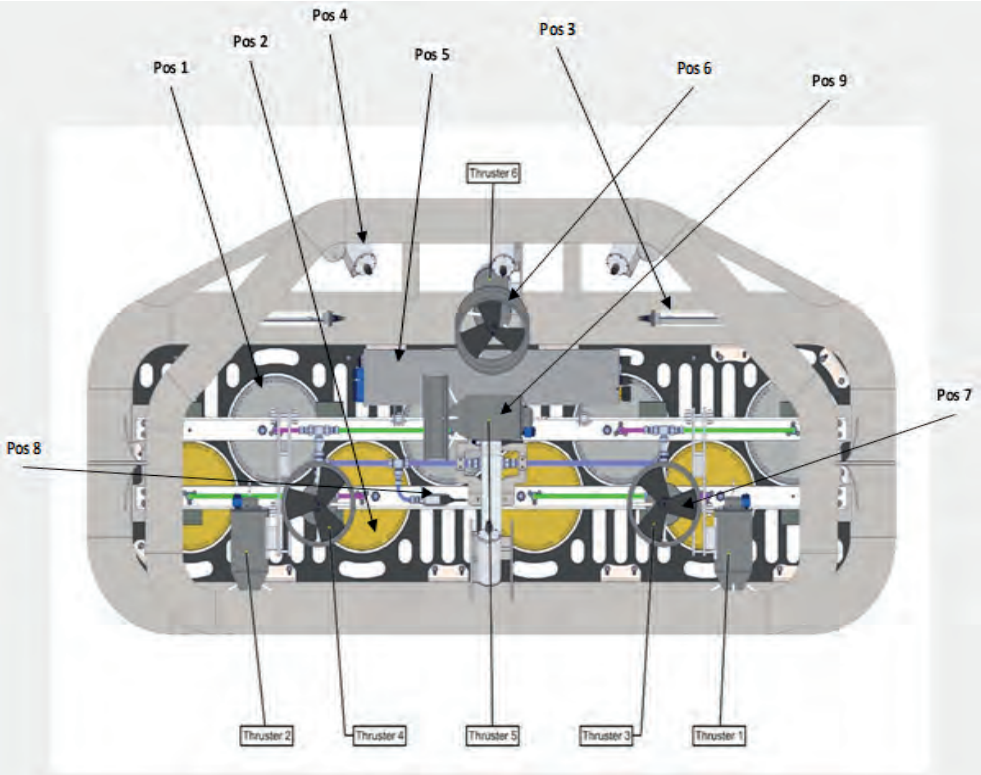

Position	Number	Item Name	Quantity	Unit	BOM/LRU
1	10003215	FNC Cleaning Unit Swivel & disk compl. Right	4	pc	LRU
2	10003216	FNC Cleaning Unit Swivel & disk compl. Left	4	pc	LRU
3	10003146	FNC LED lamps Light tube compl.	2	pc	LRU
4	10003149	FNC Camera HD-SDI wide angle	3	pc	LRU
5	10003152	FNC ROV electronics compl. sylinder	1	pc	LRU
6	10003138	FNC Thruster Nozzle 2000W	6	pc	LRU
7	10003136	FNC Thruster - propell 2000W	2	pc	LRU
8	10003746	FNC Pressure Sensor PTX5032 0-300 bar	1	pc	LRU
9	10003135	FNC Thruster 2000W*	6	pc	LRU

* It is recommended to purchase the thruster with toolbox for safe transportation item 10003888

Spare Parts Net washer FNC 8

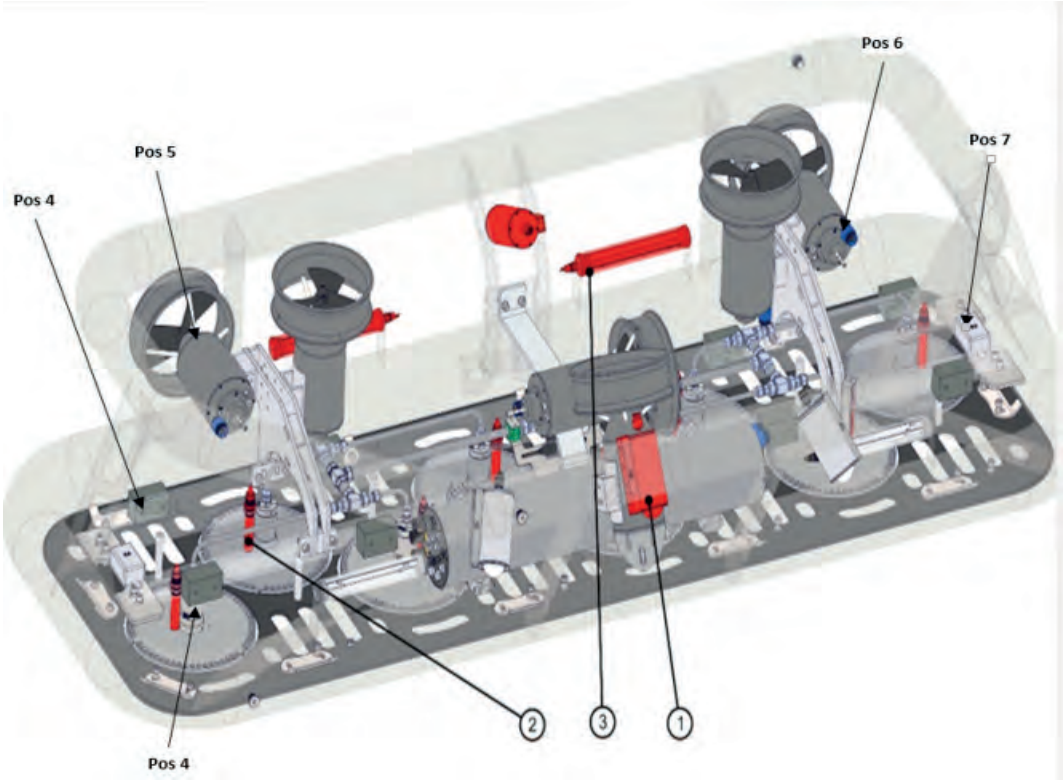

Position	Number	Item Name	Quantity	Unit	BOM/LRU
1	10003149	FNC Camera HD-SDI wide angle	3	pc	LRU
2	10003669	FNC Speed Sensor EQ	8	pc	LRU
3	10003146	FNC LED lamps Light tube compl.	2	pc	LRU
4	10003208	FNC Consumables Lead weight 3,4kg	4	pc	LRU
5	10003135	FNC Thruster 2000W*	6	pc	LRU
6	10003775	Connector BH4M AL Thruster	6	pc	LRU
7	10003209	FNC Consumables Sacrifice anode A-6	2	pc	LRU

* It is recommended to purchase the thruster with toolbox for safe transportation item 10003888

Spare Parts Net washer FNC 8

Position	Number	Item Name	Quantity	Unit	BOM/LRU
1	10003180	FNC Surface electro. Topside Power unit FNCcom	1	pc	LRU
2	10003194	FNC Surface electronics Harddisk 1TB	1	pc	LRU
3	10002781	FNC - Topside Portable Control rack	1	pc	LRU
4	10002913	FNC - Portable controller	1	pc	LRU

Spare Parts Net washer FNC 8

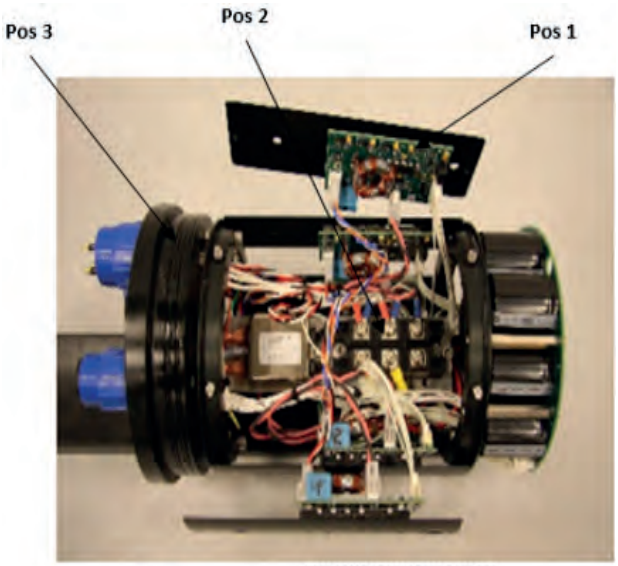

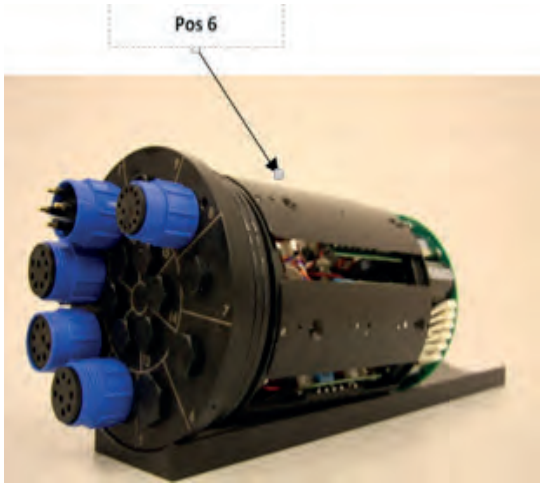

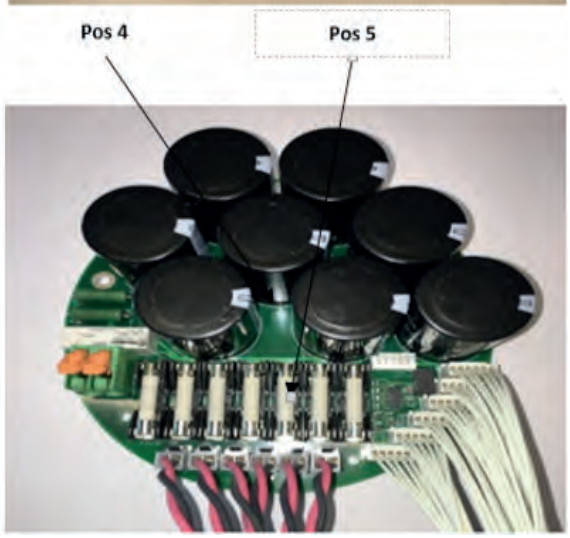

Position	Number	Item Name	Quantity	Unit	BOM/LRU
1	10003165	FNC ROV electronics VSD,for thruster	2	pc	LRU
2		Likeretter 130MT160K	1	pc	LRU
3	10001367	FNC ROV electronics o-ring electronic cylinder	1	pc	LRU
4	10003154	FNC ROV electronics capacitor card FNC	1	pc	LRU
5	10003166	FNC ROV electronics fuse & connector kit FNC	1	pc	LRU
6		Complete Cylinder		pc	LRU

AKVA Aurora SubLed 1350W combination 35m cable

#0106916

Position	Number	Item Name	Quantity	Unit	BOM/LRU
	0106916	AKVA Aurora SubLed 1350W combi. 35m cable	1	pc	LRU

AKVA Aurora SubLed 1350W combination 55m cable

#0107024

Position	Number	Item Name	Quantity	Unit	BOM/LRU
	0107024	AKVA Aurora SubLed 1350W combi. 55m cable	1	pc	LRU

AKVA Aurora Combi.Power Cabinet

1x1200wBGW+1x150wUV

#0107088

Position	Number	Item Name	Quantity	Unit	BOM/LRU
		Cabinet for Aurora light	1	pc	LRU
		AKVA Aurora SubLed 1350W combination	1	pc	LRU

AKVA Aurora Combi.Power Cabinet

2x600wBGW+2x150wUV

#0107089

Position	Number	Item Name	Quantity	Unit	BOM/LRU
		Cabinet for Aurora light	1	pc	LRU
		AKVA Aurora SubLed 1350W combination	2	pc	LRU

AKVA Aurora Combi.Power Cabinet

3x400wBGW+3x150wUV

#0107090

Position	Number	Item Name	Quantity	Unit	BOM/LRU
		Cabinet for Aurora light	1	pc	LRU
		AKVA Aurora SubLed 1350W combination	3	pc	LRU

BlueLED 100W 480nm

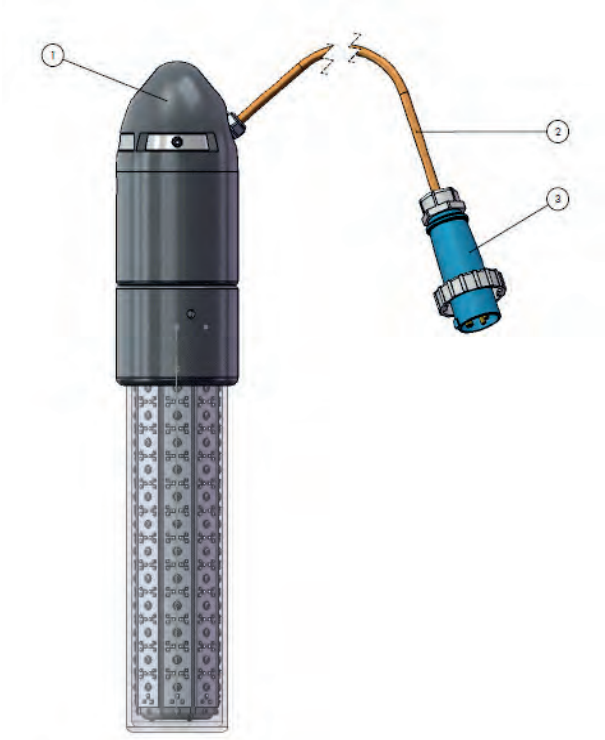

Position	Number	Item Name	Quantity	Unit	BOM/LRU
1		BlueLED 100W wo/ Cable	1	pc	BOM page 25
2	319-194	Cable H07BQ-F 3G 1,5 PUR	optional	m	LRU
3	980501-278	Contact Plug Male 216-6 IPX7 Mennekes 278	optional	pc	LRU
	0106627	Contact plug male 2 pin IP54 stickpropp	optional	pc	LRU
	390-004	LL200 Fluid/350CS Silicone Oil 200 kg	2	l	LRU

BlueLED 100W 480nm wo/ Cable

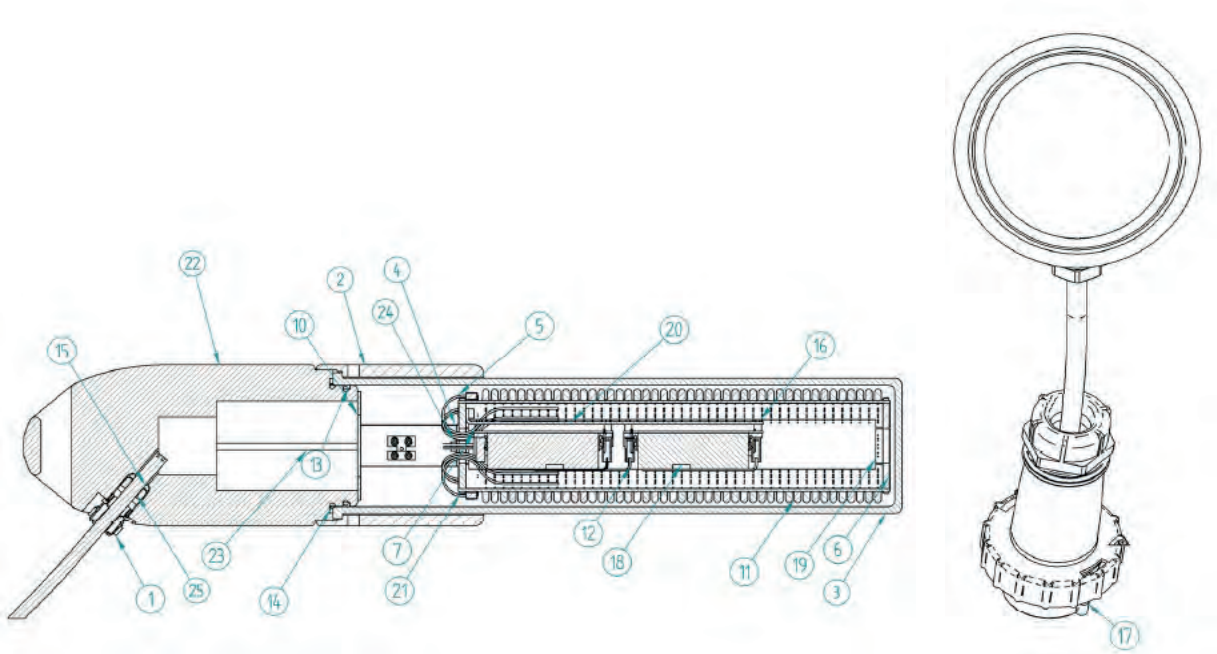

Position	Number	Item Name	Quantity	Unit	BOM/LRU
1	0106146	Nipple Agro M20 Ø8-11 Long Brass IP68	1	pc	LRU
2	980501-322	End piece Opposite 1000W	1	pc	LRU
3	980501-Glas2	Glas Ø100x415mm SubLite 1000W	1	pc	LRU
4	315-002	Bracket Hentec Aluminium	1	pc	LRU
5	504-100	Hentec LED Cable	8	pc	LRU
6	302-001	Holder POM	2	pc	LRU
7	312-100	Bush spacer M3x5mm Nylon	8	pc	LRU
10	390-002	LED Lock 1 Al	1	pc	LRU
11	400-100	Hentech LED module Blue	8	pc	LRU
12	504-200-XP	Loom Kit for AC60US12	2	pc	LRU
13	316-009-Kls	Seal O-Ring 80x4 NBR 70	1	pc	LRU
14	316-010-DMI	Seal O-Ring 85x4 NBR 70	1	pc	LRU
15	316-009	Seal O-Ring 9x4,5 NBR 70	1	pc	LRU
16	308-100	Screw M3x10	8	pc	LRU
17	980501-278	Contact Plug Male 216-6 IPX7 Mennekes 278	1	pc	LRU
18	201-100-XP	Power XP EMC 12V 60W SubLED 100W	2	pc	LRU
19	390-003	PSU Foil	1	pc	LRU
20	315-003	PSU holder SubLED 100W Aluminium	1	pc	LRU
21	308-269	Screw Pan Head Sheet M2,2x6,5 Self Tap	32	pc	LRU
22	980501-321	End piece 1000W Black POM	1	pc	LRU
23	980501SY5X120	Screw Hex Socket M5x120	2	pc	LRU
24	308-350	Screw Hex Socket M4x8	4	pc	LRU
25	980501-223	Seal Washer 400W	1	pc	LRU

Only available for spareparts

BlueLED 400W 480nm 55m

#0105941

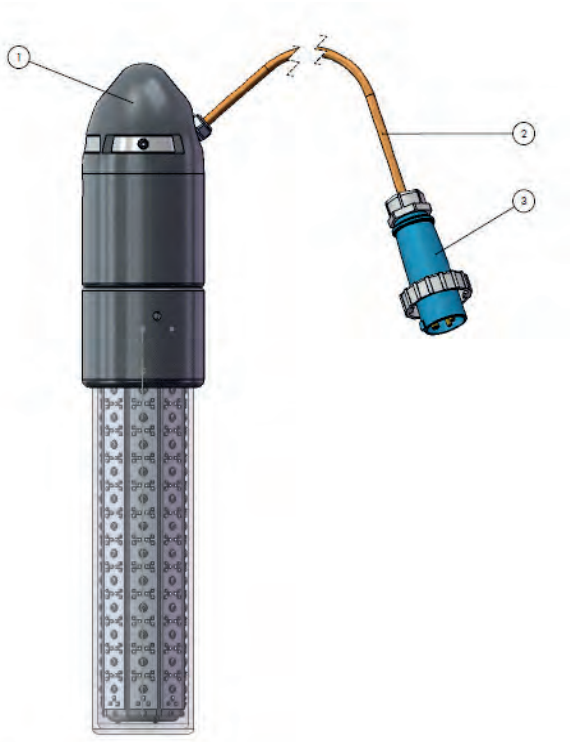

Position	Number	Item Name	Quantity	Unit	BOM/LRU
1	0105940	BlueLED 400W wo/ Cable	1	pc	BOM page 27
2	319-194	Cable H07BQ-F 3G 1,5 PUR	55	m	LRU
3	980501-278	Contact Plug Male 216-6 IPX7 Mennekes 278	optional	pc	LRU
	0106627	Contact plug male 2 pin IP54 stickpropp	optional	pc	LRU
	390-004	LL200 Fluid/350CS Silicone Oil 200 kg	2	l	LRU

BlueLED 400W wo/ Cable
#0105940

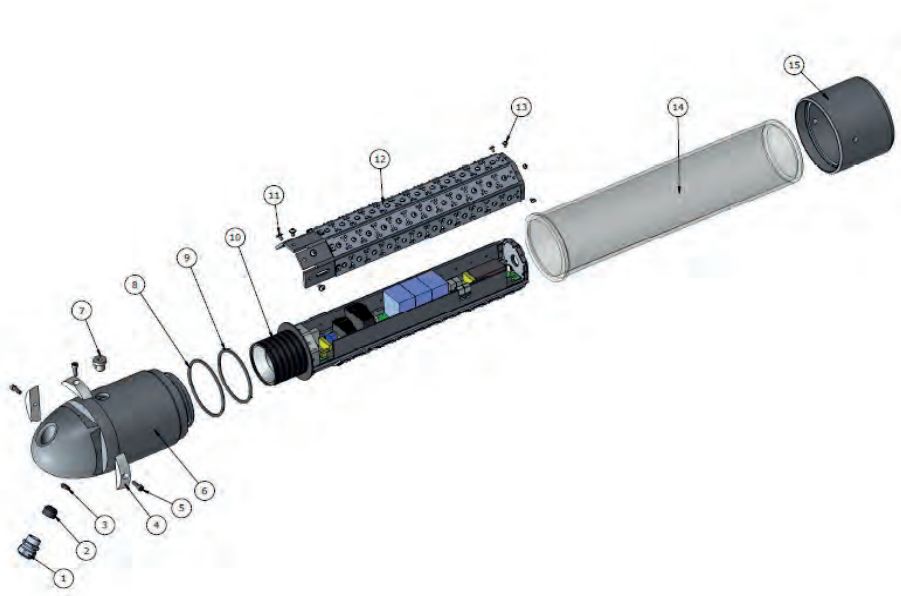

Position	Number	Item Name	Quantity	Unit	BOM/LRU
1	0106146	Nipple Agro M20 Ø8-11 Long Brass IP68	1	pc	LRU
2	980501-223	Seal Washer 400W	1	pc	LRU
3	316-009	Seal O-Ring 9x4,5 NBR 70	1	pc	LRU
4	0105950	Anode Zinc Volvo 110gr	3	pc	LRU
5	91205134	Screw Hex Socket M5x16	3	pc	LRU
6	0105910	Housing LED Light	1	pc	LRU
7	0105960	Plug BSP G1/4 AISI 316	1	pc	LRU
8	316-010-DMI	Seal O-Ring 85x4 NBR 70	1	pc	LRU
9	319-009-KLS	Seal O-Ring 80x4 NBR 70	1	pc	LRU
10	0105943	BlueLED 400W Core Assy	1	pc	BOM page 28
11	10000437	Screw eco-fix M4x8 FZB	4	pc	LRU
12	0105942	BlueLED 400W LEDstrip23 Assy	1	pc	LRU
13	10000435	Screw eco-fix M3x6 FZB	4	pc	LRU
14	980501-Glas2	Glas Ø100x415mm Sublite 1000W	1	pc	LRU
15	0105911	Housing NUT LED Light	1	pc	LRU

BlueLED 400W Core Assy
#0105943

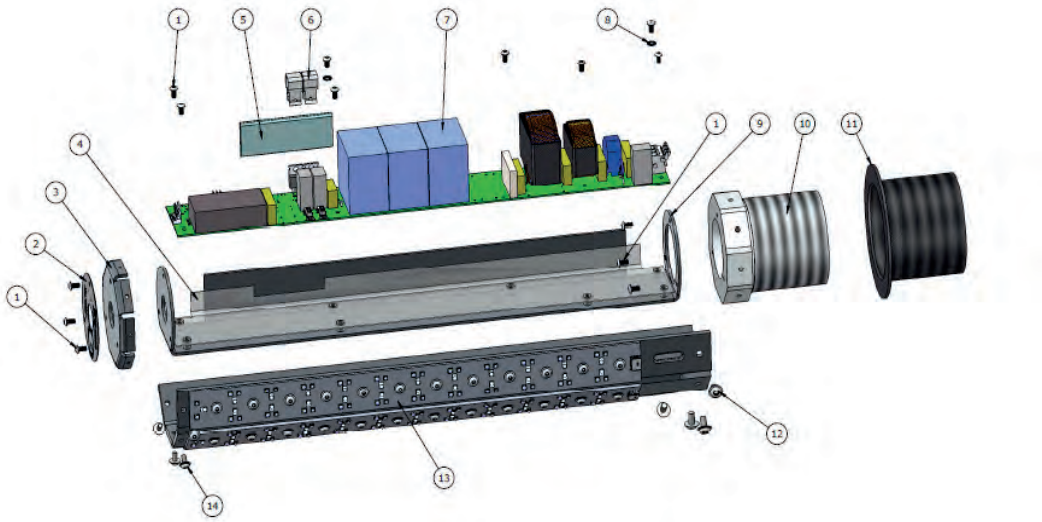

Position	Number	Item Name	Quantity	Unit	BOM/LRU
1	10000438	Screw Button Hex Head M3x6 FZB	16	pc	LRU
2	10000261	BlueLED 400W Signplate EU	1	pc	LRU
3	0105905	Bracket Top LED Light	1	pc	LRU
4	0106180	Isolator LED Circuit Board EMC	1	pc	LRU
5	10000258	Cool Isolation CHO-therm type 1674	1	pc	LRU
6	10000259	Cool Clips TO-5220/TO-247	4	pc	LRU
7	10000303	BlueLED 400W Circuit Board EMC	1	pc	LRU
8	10000446	Washer Lock M8 FZB	2	pc	LRU
9	0101678	Bracket LED Circuit Board EMC ASSY	1	pc	LRU
10	0105906	Bracket Bottom LED Light	1	pc	LRU
11	0106079	Isolator LED Light	1	pc	LRU
12	10000437	Screw eco-fix M4x8 FZB	4	pc	LRU
13	0105942	BlueLED 400W LEDstripe23 Assy	1	pc	BOM page 29
14	10000435	Screw eco-fix M3x6 FZB	4	pc	LRU

BlueLED 400W LEDstrip23 Assy
#0105942

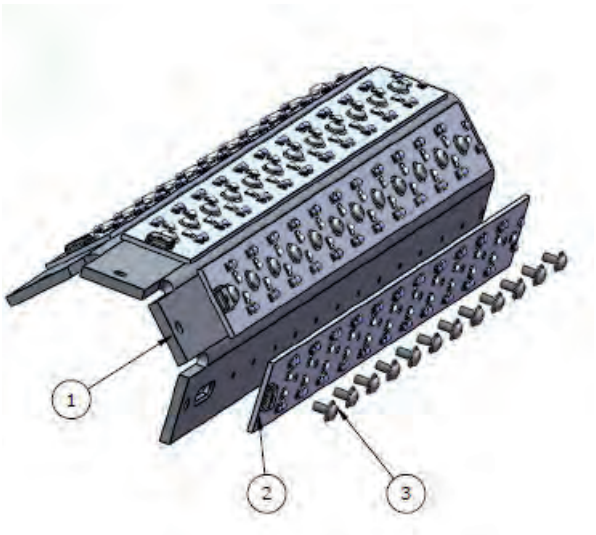

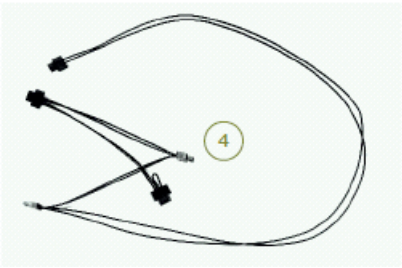

Position	Number	Item Name	Quantity	Unit	BOM/LRU
1	0105902	Bracket LEDstrip23	1	pc	LRU
2	0106133	LEDstrip23 w/ Plug	4	pc	LRU
3	10000435	Screw eco-fix M3x6 FZB	48	pc	LRU
4	10000264	LED list Cable 4 connectors	1	pc	LRU

IDEMA Sublite Integra 250W

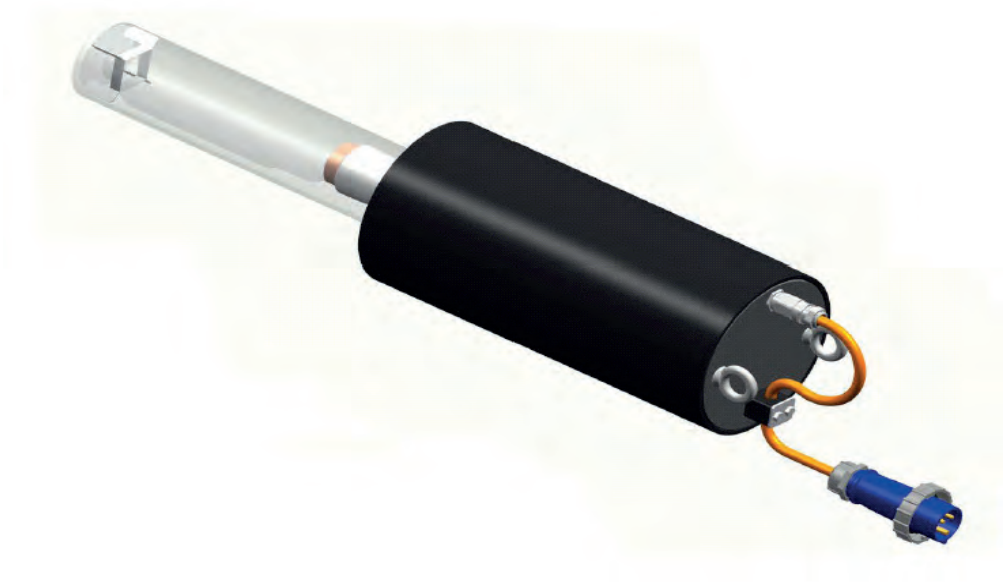

Position	Number	Item Name	Quantity	Unit	BOM/LRU
		IDEMA SubLite Integra 250W wo/Cable	1	pc	BOM page 31
	319-194	Cable H07BQ-F 3G 1,5 PUR	optional	m	LRU
	980501-278	Contact Plug Male 216-6 IPX7 Mennekes 278	optional	pc	LRU
	0106627	Contact plug male 2 pin IP54 stickpropp	optional	pc	LRU

Only avaiable for spareparts

IDEMA SubLite Integra 250W

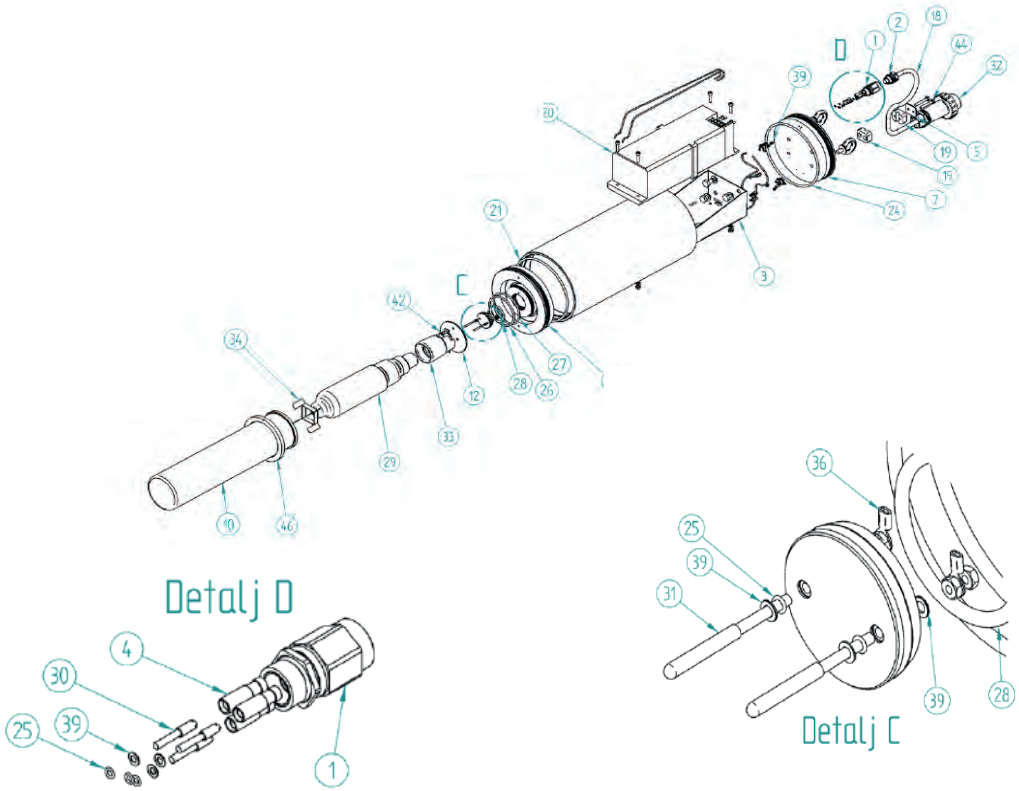

Position	Number	Item Name	Quantity	Unit	BOM/LRU
1	317-025	Adapter Agro M20/M20 80-145mm	1	pc	LRU
2	318-028	Nipple Agro M20 Ø8-145 Long Brass IP68	1	pc	LRU
3	315-001	Bracket Ballast 400W AISI304	1	pc	LRU
4	317-008	Bush roundpin A1504HO	3	pc	LRU
5	317-021	Cover Plate Group 2 AISI316	1	pc	LRU
7	315-022	End Piece 400W Integra Black POM	1	pc	LRU
9	315-062	Front Piece 400W Black POM	1	pc	LRU
10	980501-Glas	Glas Ø90x355mm Sublite 400W	1	pc	LRU
12	315-172	Isolation plate 400W PTFE	1	pc	LRU
19	317-020	Clamp 8-22mm Rubber for Single Tunbe	2	pc	LRU
20	504-152	Layrton-KIT-MS25/23 AF PT 250W Integra	1	pc	LRU
21	315-202	Distance Piece 400W Integra Black POM	1	pc	LRU
24	316-000-Kls	Seal O-Ring 115x5 NBR 70	2	pc	LRU
25	316-002	Seal O-Ring 3x1 NBR 70	5	pc	LRU
26	316-005	Seal O-Ring 75x4 NBR 70	1	pc	LRU
27	9805001-250W	Bulb HQI-T 250W/D E40	1	pc	LRU
28	316-004	Seal O-Ring 69x4 NBR 70	1	pc	LRU
30	317-050	Pin Short Brass	3	pc	LRU
31	317-052	Pin Long Brass	2	pc	LRU
32	980501-278	Contact Plug Male 216-6 IPX7 Mennekes 278	1	pc	LRU
33	319-027	Socket E40 Porcelain	1	pc	LRU
34	980501-224	Bulb positioner 400W	1	pc	LRU
39	312-005	Washer M3 EIZ	15	pc	LRU
42	308-040	Screw Hex Socket M5x16	2	pc	LRU
44	308-032	Screw Hex Head M6x40	2	pc	LRU
46	311-022	Tension ring 400W Black POM	1	pc	LRU

IDEMA Sublite Integra 400W

Position	Number	Item Name	Quantity	Unit	BOM/LRU
		IDEMA SubLite Integra 400W wo/ Cable	1	pc	BOM page 33
	319-194	Cable H07BQ-F 3G1,5 PUR	optional	m	LRU
	980501-278	Contact Plug Male 216-6 IPX7 Mennekes 278	optional	pc	LRU
	0106627	Contact plug male 2 pin IP54 stickpropp	optional	pc	LRU

Only avaiable for spareparts

IDEMA SubLite Integra 400W wo/ Cable

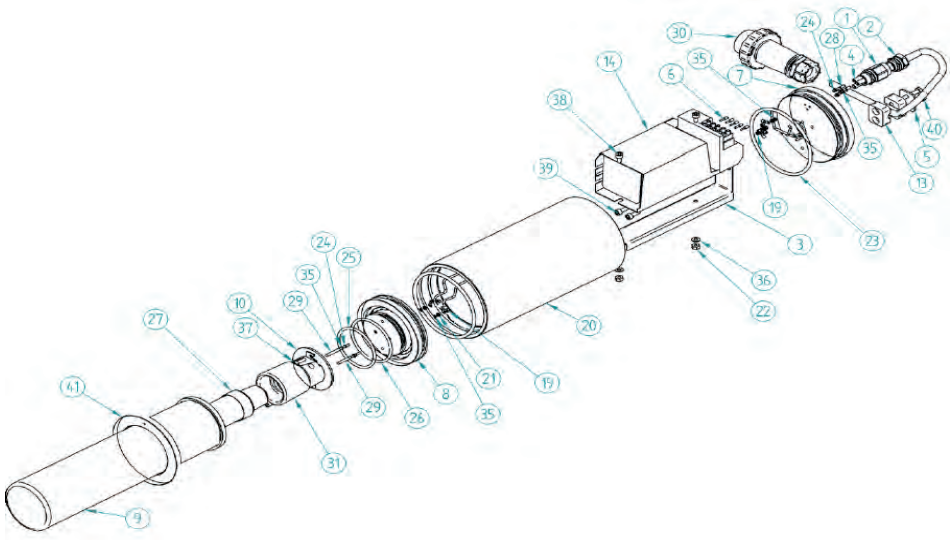

Position	Number	Item Name	Quantity	Unit	BOM/LRU
1	317-025	Adapter Agro M20/M20 80-145mm	1	pc	LRU
2	0106146	Nipple Agro M20 Ø8-11 Long Brass IP68	1	pc	LRU
3	315-001	Bracket Ballast 400W AISI 304	1	pc	LRU
4	317-008	Bush Roundpin A1504HO	3	pc	LRU
5	317-021	Cover Plate Group 2 AISI 316	1	pc	LRU
6	317-014	Sleeve 1,5mm2 DZ5-CE015	5	pc	LRU
7	315-022	End pice 400W Integra Black POM	1	pc	LRU
8	315-062	Front piece 400W Black POM	1	pc	LRU
9	980501-Glas	Glas Ø90x355mm Sublite 400W	1	pc	LRU
10	315-172	Isolation Plate 400W PTFE	1	pc	LRU
13	317-020	Clamp 8-12mm Rubber Single tube	2	pc	LRU
14	504-152	Layrton-KIT-MS25/23 AF PT 250W Integra	1	pc	LRU
19	313-017	Nut Nylock M3 EIZ	3	pc	LRU
20	315-202	Distance piece 400W Integra Black POM	1	pc	LRU
21	313-004	Nut M3 EIZn	7	pc	LRU
22	313-005	Nut M6 EZ	2	pc	LRU
23	316-000-Kls	Seal O-Ring 115x5 NBR 70	2	pc	LRU
24	316-002	Seal O-Ring 3x1 NBR 70	5	pc	LRU
25	316-004	Seal O-Ring 69x4 NBR 70	1	pc	LRU
26	316-005	Seal O-Ring 75x4 NBR 70	1	pc	LRU
27	980501-400W	Bulb HQI-BT 400W/D E40	1	pc	LRU
28	317-050	Pin short Brass	3	pc	LRU
29	317-052	Pin long Brass	2	pc	LRU
30	980501-278	Contact Plug Male 216-6 IPX7 Mennekes 278	1	pc	LRU
31	319-027	Socket E40 Porcelain	1	pc	LRU
35	312-023	Washer M6 EIZ	2	pc	LRU
36	312-005	Washer M3 EIZ	15	pc	LRU
37	308-040	Screw Hex Socket M5x16	2	pc	LRU
38	0103358	Screw Hex Zocket M16x10	2	pc	LRU
39	308-044	Screw Hex Socket M6x16 EIZ	4	pc	LRU
40	308-032	Screw Hex Head M6x40	2	pc	LRU
41	311-022	Tension ring 400W Black POM	1	pc	LRU
	980501-224	Bulbpositioner 400W	1	pc	LRU

IDEMA SubLite Integra 1000W

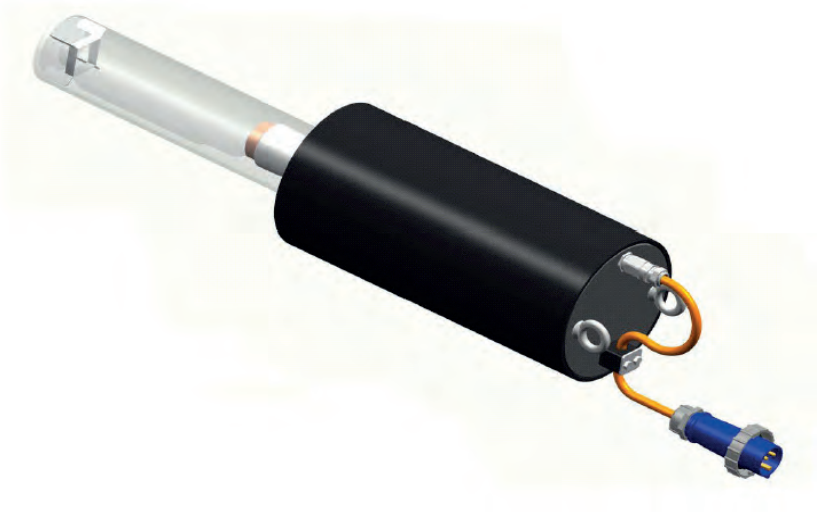

Position	Number	Item Name	Quantity	Unit	BOM/LRU
		IDEMA SubLite Integra 1000W wo/ cable	1	pc	BOM page 34
	319-208	Cable H07BQ-F 3G 2,5 PUR	optional	m	LRU
	980501-278	Contact Plug Male 216-6 IPX7 Mennekes 278	optional	pc	LRU
	0106627	Contact plug male 2 pin IP54 stickpropp	optional	pc	LRU

Only avaiable for spareparts

IDEMA SubLite Integra 1000W wo/ Cable

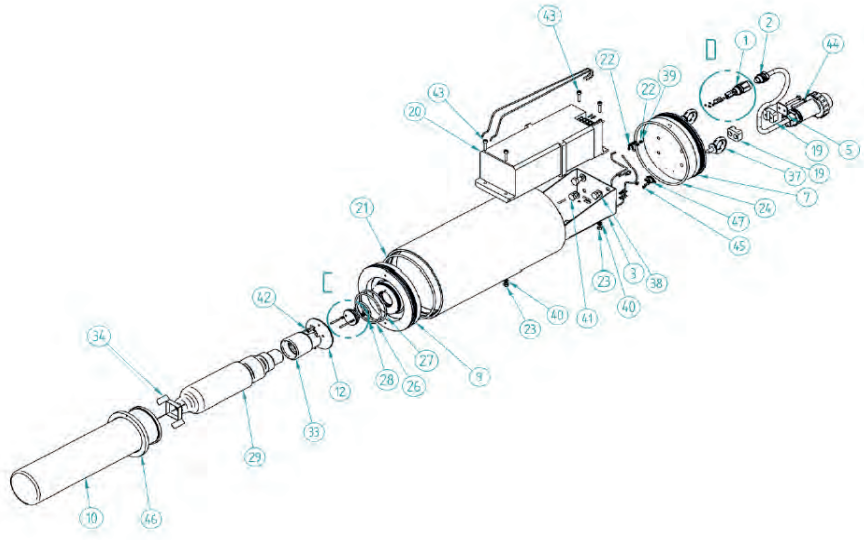

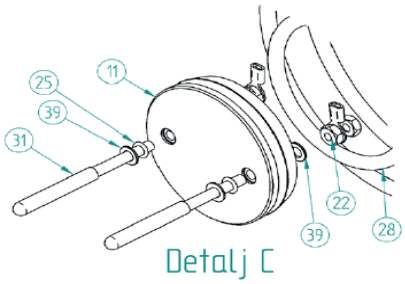

Detalj C

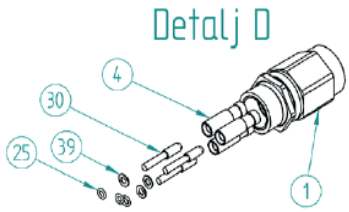

Position	Number	Item Name	Quantity	Unit	BOM/LRU
1	317-025	Adapter Agro M20/m20 80-145mm	1	pc	LRU
2	0106146	Nipple Agro M20 Ø8-11 Long Brass IP68	1	pc	LRU
3	315-005	Bracket Ballast 1000W EIZ	1	pc	LRU
4	317-039	Bush Roundpin 15-25mm2 A2505HO	3	pc	LRU
5	317-021	Cover Plate Group 2 AISI 316	1	pc	LRU
7	315-021	End Piece 1000W Integra Black POM	1	pc	LRU
9	315-060	Front Piece 1000W Integra Black POM	1	pc	LRU
10	980501-Glas2	Glas Ø100x415mm Sublite 1000W	1	pc	LRU
11	315-150	Liner PTFE	1	pc	LRU
12	315-170	Isolation plate 1000W PTFE	1	pc	LRU
19	317-020	Clamp 8-12mm Rubber for Single tube	2	pc	LRU
20	504-150	Layrton HSE-SAPE AF 100 23-F 1000W Integra	1	pc	LRU
21	315-200	Distance Piece 1000W Integra Black POM	1	pc	LRU
22	313-004	Nut M3 EIZn	7	pc	LRU
23	313-005	Nut M6 EZ	4	pc	LRU
24	316-001	Seal O-Ring 175x5xNBR 70	1	pc	LRU
25	316-002	Seal O-Ring 3x1 NBR 70	5	pc	LRU
26	316-009-Kls	Seal O-Ring 80x4 NBR 70	1	pc	LRU
27	316-010-DMI	Seal O-Ring 85x4 NBR 70	1	pc	LRU
28	316-003	Seal O-Ring 42x4 NBR 70	1	pc	LRU
29	980501-1000W	Bulb HQI-T 1000W/D E40	1	pc	LRU
30	317-050	Pin Short brass	3	pc	LRU
31	317-052	Pin Long Brass	2	pc	LRU
33	319-027	Socket E40 Porcelain	1	pc	LRU
34	980501-324	Bulb positioner 1000W	1	pc	LRU
37	308-046	Ring Screw M10 AISI 316	2	pc	LRU
38	312-008	Washer M10 EIZ	4	pc	LRU
39	312-005	Washer M3 EIZ	15	pc	LRU
40	312-027	Washer Spring M6	4	pc	LRU
41	308-031	Screw Hex Socket M10x16	4	pc	LRU
42	308-040	Screw Hex Socket M5x16	2	pc	LRU
43	308-045	Screw Hex Socket M6x25	2	pc	LRU
44	308-032	Screw Hex Head M6x40	2	pc	LRU
45	308-248	Screw Pan Head Sheet M3,5x6,5 POZ	2	pc	LRU
46	311-020	Tension Ring1000W Black POM	1	pc	LRU
47	500-020	Thermic Switch 70/55C	1	pc	LRU

Spare parts for lights

Position	Number	Item Name	Quantity	Unit	BOM/LRU
	89003-LUB	Superlube Teflon grease 85gr	1	pc	LRU
	890803-281104	Hooked spanner w/3 mm tap (1000W light)	1	pc	LRU
	980501-112014	Hooked spanner w/8 mm tap (400W light)	1	pc	LRU

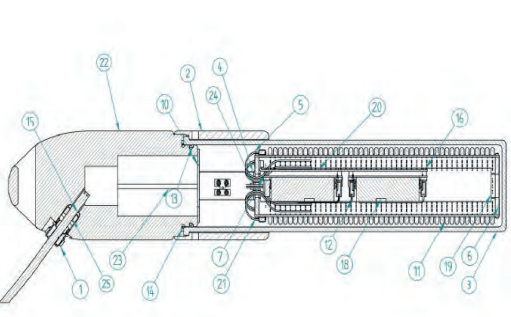

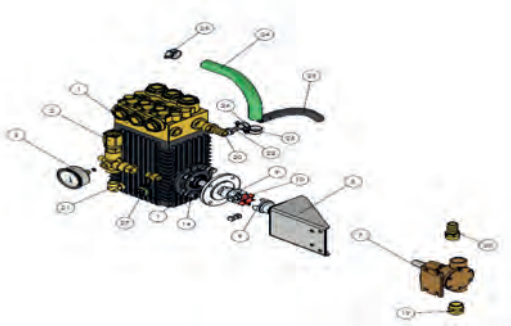

ordre@akvagroup.com **phone: +47 51 77 85 03**

AKVA GROUP™